Stabilization of Large-scale PV Generation By Battery Storage (FY2006-FY2010)

Achieving expected output from renewable energy

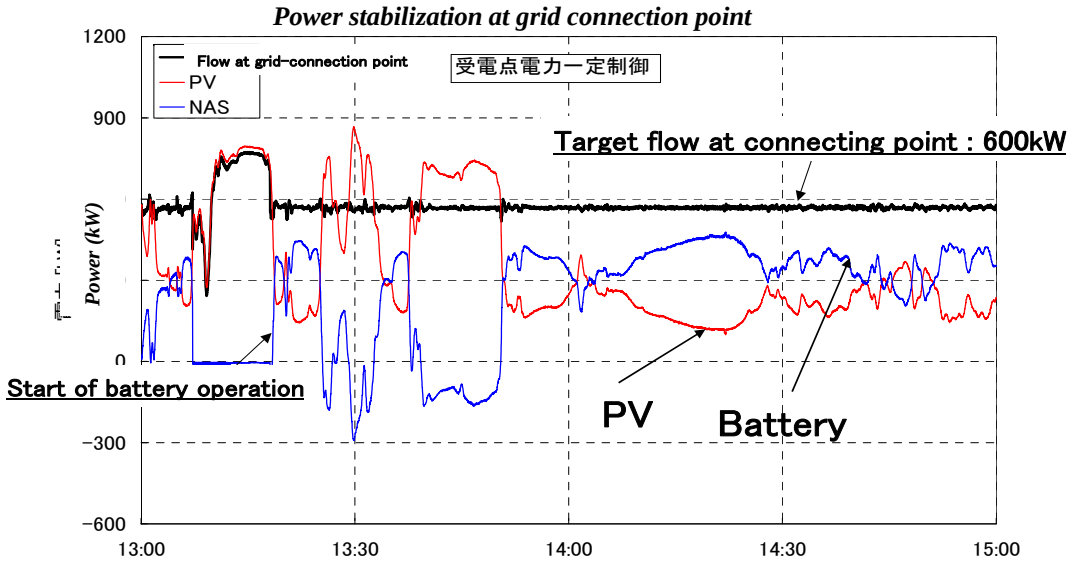

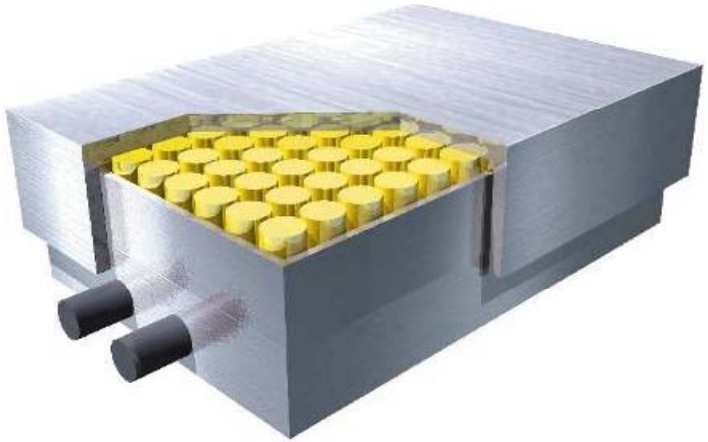

Copyright: Ryuichi Yokoyama, Waseda University, Japan

Wind Power Stabilization Technology Development Project (FY2003-FY2007)

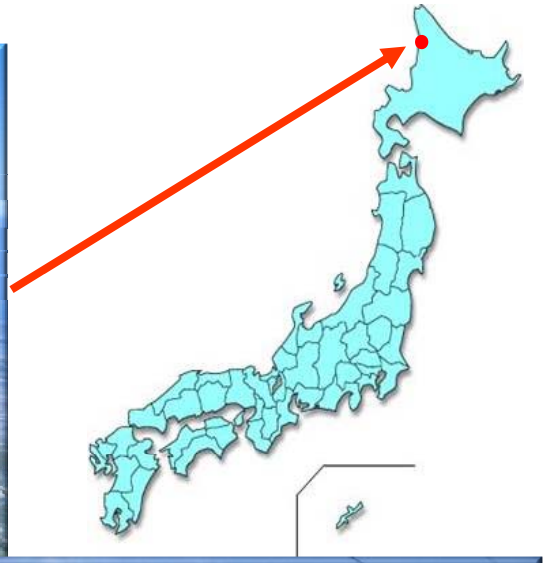

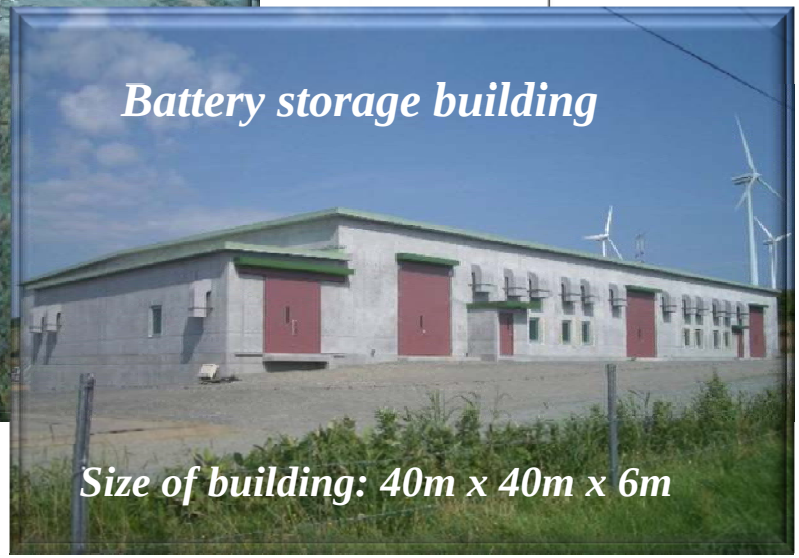

Copyright: Ryuichi Yokoyama, Waseda University, Japan

Wind Power Stabilization Technology Development Project (FY2003-FY2007)

Reducing output fluctuations from renewable energy

- ◆Redox flow battery inverter capacity: 6000 kW

  (Same as short term output rate of battery)

- ◆Nominal capacity of battery: 4000 kW

- ◆Storage capacity: 6000 kWh

- ◆Total weight: 950 tons

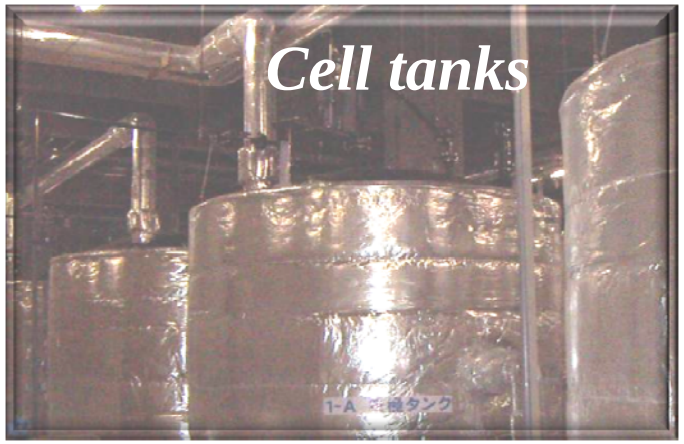

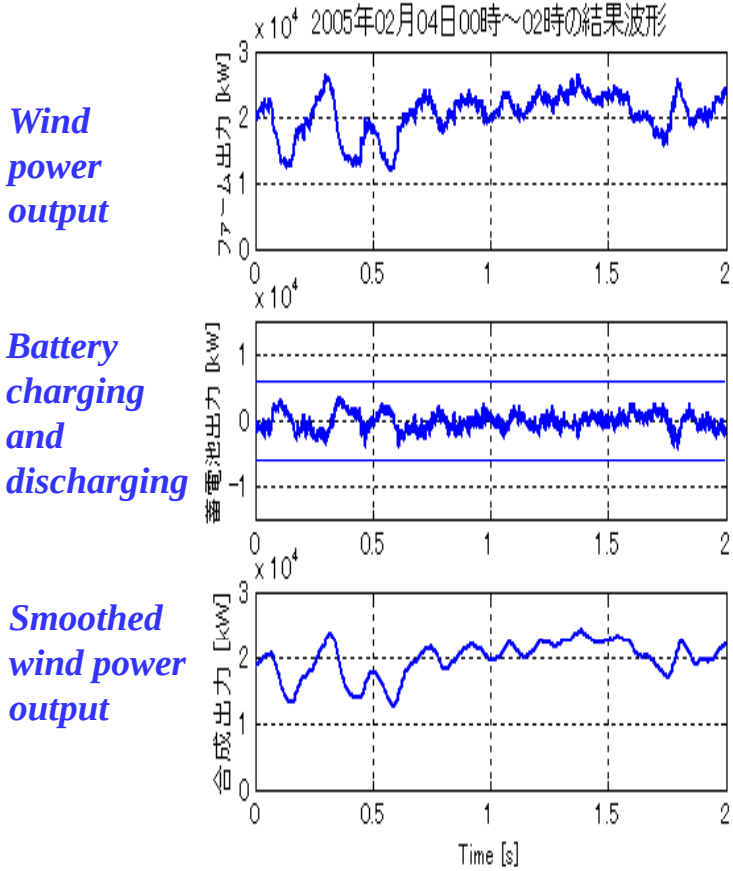

Smoothing time constant T = 1 minute

Copyright: Ryuichi Yokoyama, Waseda University, Japan

Overview and Components of Mitsubishi Smart Grid Test Facilities

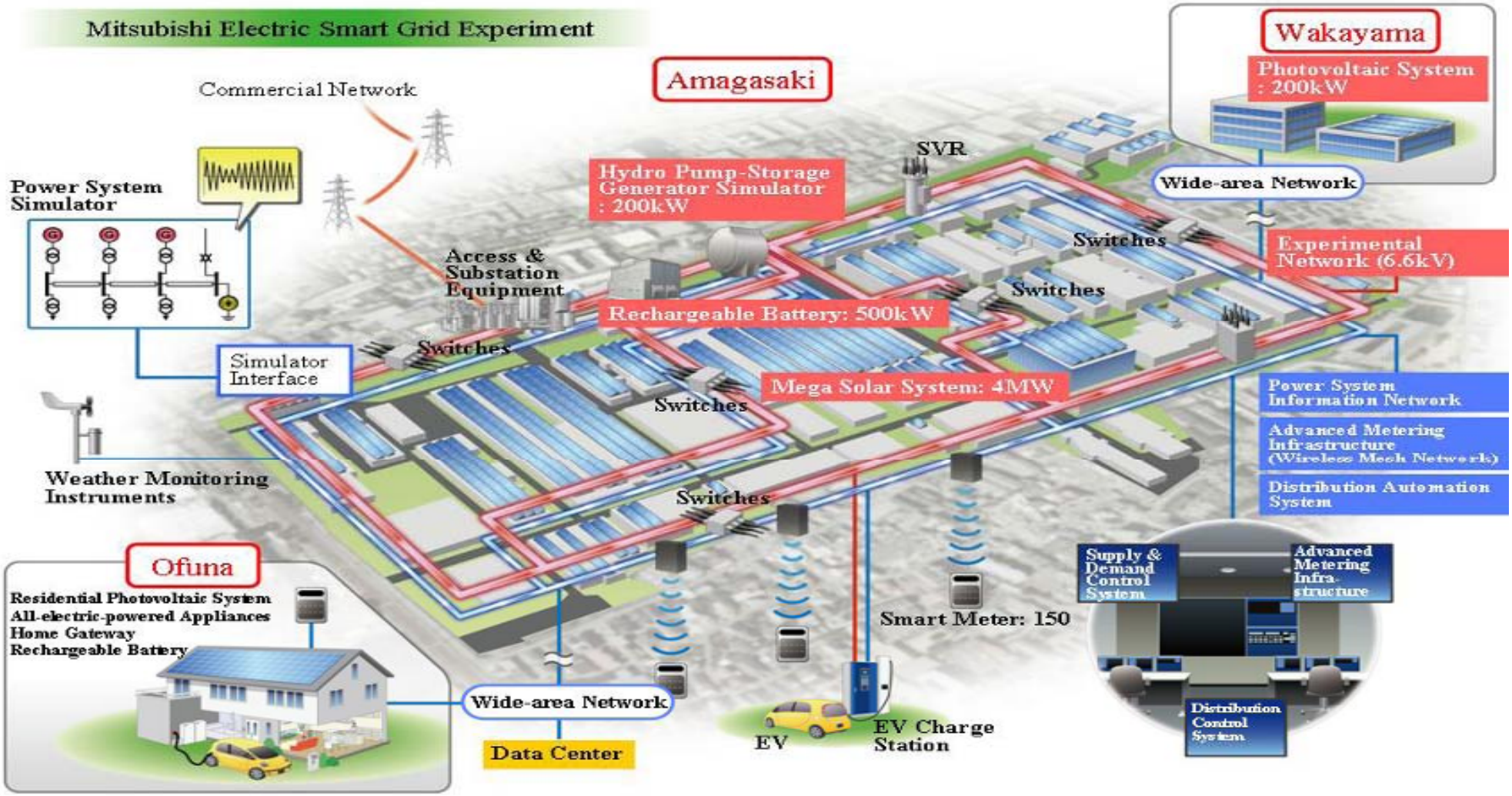

Source:http://global.mitsubishielectric.com/news/news_releases/2010/mel0797.pdf

Copyright: Ryuichi Yokoyama, Waseda University, Japan

Smart Community Pilot Projects in Japan

Outline and Scale

- Implementation in Minato Mirai, Kouhoku New Town and Kanazawa Districts.
- 7MW PV generation, 4,000 Smart houses, 2,000 Electric vehicles,
- Target to install totally 27MW Sustainable energy.
- Demand Response demonstration by BEMS/HEMS and Integrated EMS in 3 areas
- Target to reduce 30% CO2 by 2025 (in all Yokoyama against 2004)
- For 5 years, the total budget will be Yen 19.5 billion (¥ 74 billion in media)

Features

- Advisements to show future smart houses in model house sites in Minato Mirai area where APEC was held.
- Implementation of large scale demand response and energy management under citizens participation considering the following features;
  - Minatro Mirai District :High buildings and apartment buildings
  - Kouhoku New Town : Middle buildings and houses
  - Kanazawa District: Large apartment houses and PV
- Not only newly built houses but also existing residences
- Establishment of Special Purpose Com. and Continuous development for domestic/Oversea regions

Participants

Tokyo Gas, NISSAN, TOSHIBA Leading Innovation, Panasonic, MEIDEN, accenture

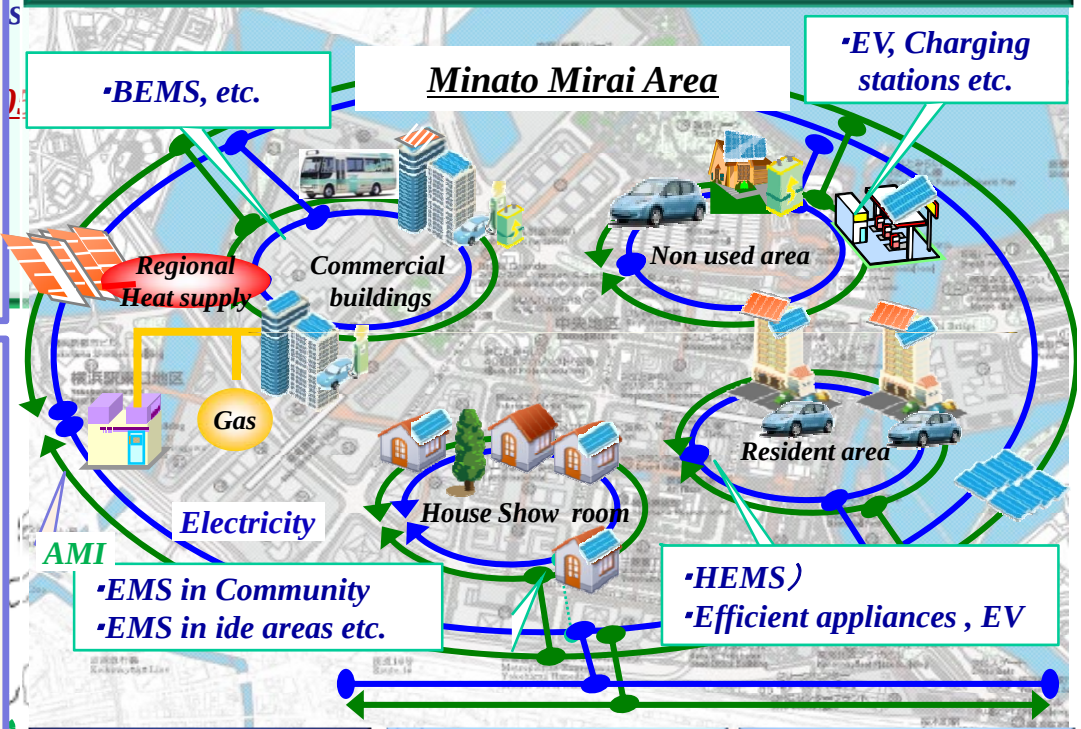

Minato Mirai 21

Kouhoku New Town

Kanazawa District

Implementation and Oversea Deployment

Japan –North Africa

- Large scale PV and Solar thermal generation will be implemented in North Africa where a plenty of solar radiation is available.

Japan-USA/New Mexico

- High level technology implementation by US National Lab. and NEDO is underway in 5 locations in NM State
- Japan participated in project at 2 locations and 31 enterprises such as Toshiba, Kyocera joined the projects (Budget is App. Yen 7 million)

Japan –India

- On Prime Minister Hatayama visit, both countries attained an agreement to implement smart communities as the Deli/ Mumbai Initiative in December, 2009.
- Establishment of consortium by related enterprises and promotion of the initiatives by Deli/ Mumbai Public corporation and NEDO later than 2010
- Promulgate of MOU by Japanese/ Indian Ministers to start feasibility studies, consortium and corporations in April 2010

Japan (Okinawa) –USA (Hawaii)

- In the top level Japan/USA meeting on clean energy technology cooperation held in November,2009 , establishment of Task Force has been agreed
- Island smart grid models are to demonstrate to the world.
- In the top level Japan/USA meeting during APEC in November, 2010, it is shown as an APEC Canonical model

Copyright: Ryuichi Yokoyama, Waseda University, Japan

Future Plan for Smart Community Projects

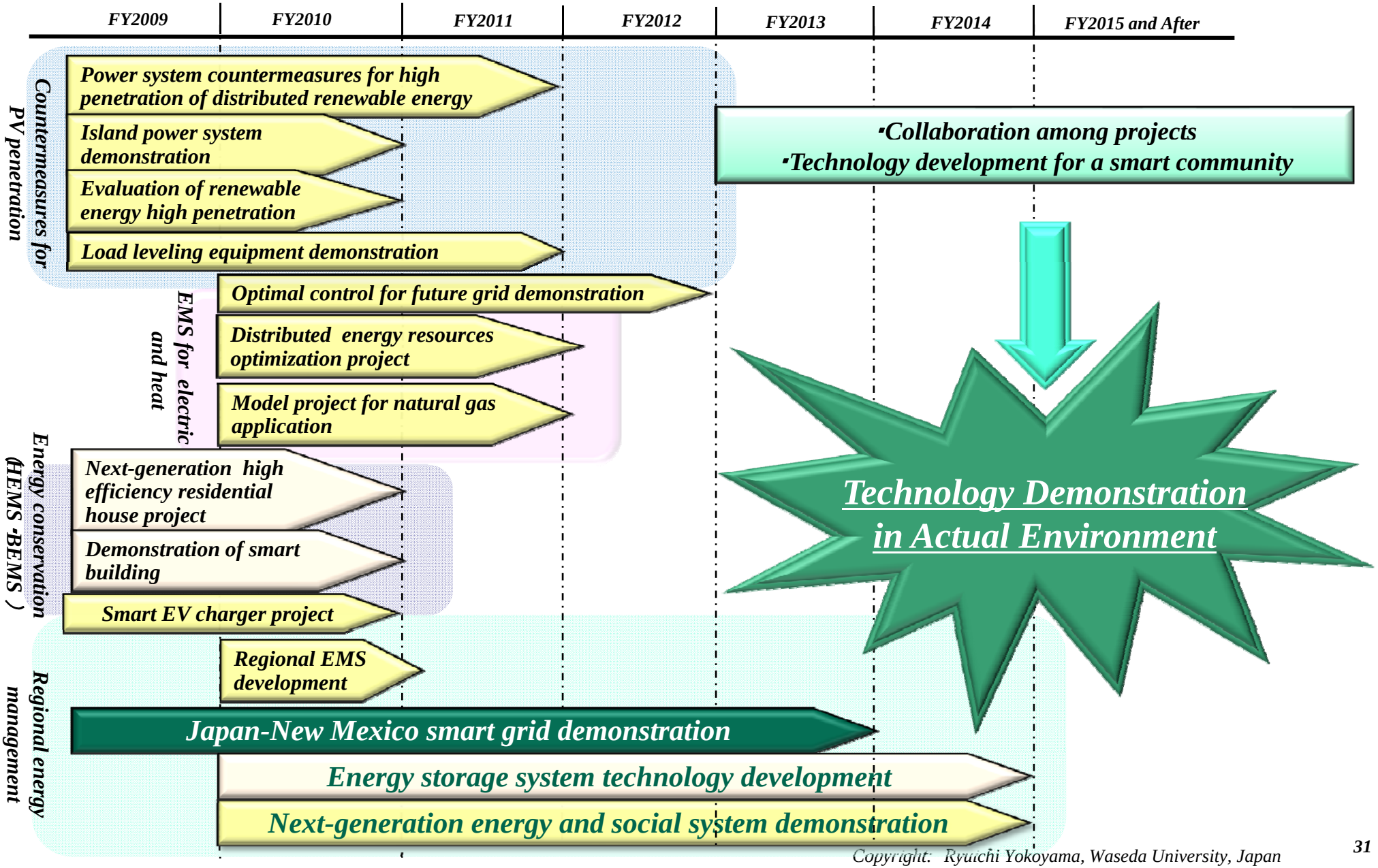

Copyright: Ryuichi Yokoyama, Waseda University, Japan

Resilient and Expandable Smart Grid for Disaster and Restoration

Copyright: Ryuichi Yokoyama, Waseda University, Japan

Energy Management in Houses and Areas

- Energy management between houses and in larger areas is more effective than that in a single house .
- Excess electricity stored in battery in sunny areas can be transferred to houses that require electricity. It is not necessary for a battery to be installed in each individual house. If one battery is installed for every few houses, then the installation cost will be decreased.
- Demand in residential areas is larger in the morning and at night and demand in commercial areas is large in daytime , by transferring electricity between areas, electricity can be used effectively.

Consumption in a house ▶ Transfer between houses ▶ Optimization of transfer in the region

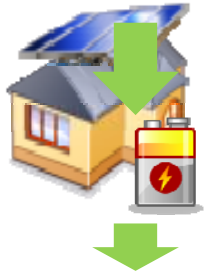

Excess electricity from PV generation is disconnected

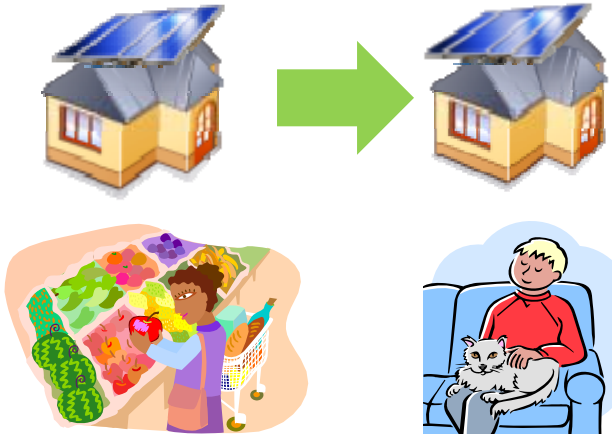

Excess electricity is transferred and used in neighboring houses

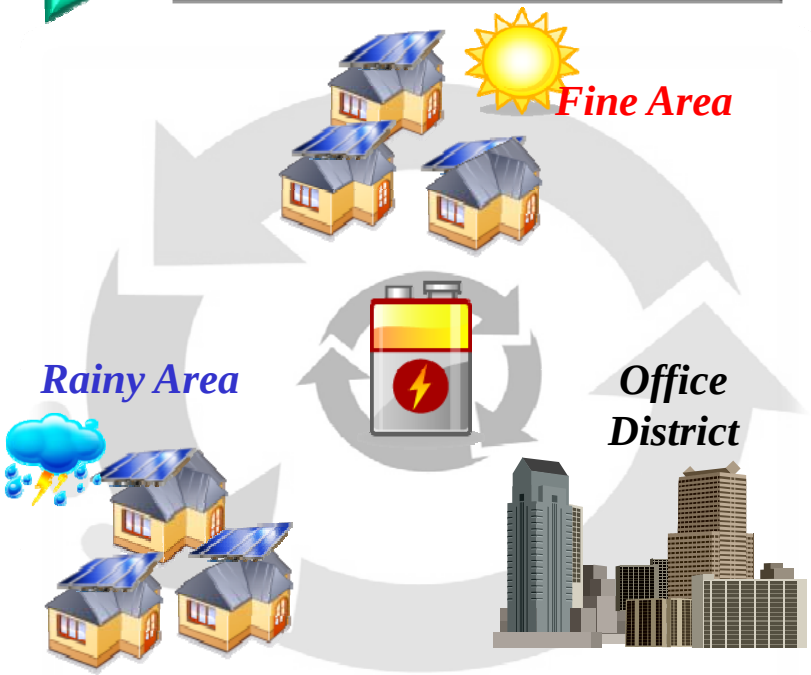

Copyright: Ryuichi Yokoyama, Waseda University, Japan

Expandable Smart Distribution Grid for Efficient Use of Sustainable Energy

Energy Supply Side

Use of Sustainable Energy

PV Generation, Wind Generation,
Biomass, Solar Thermal, Geothermal

Energy Demand Side

Efficient Facilities and Appliance

Gas Engine, Fuel Cell,
Secondary Battery
DC Appliance, HEMS, BEMS, ZEB

Cluster-Oriented Electric Power Supply System

Minimal Cluster Unit

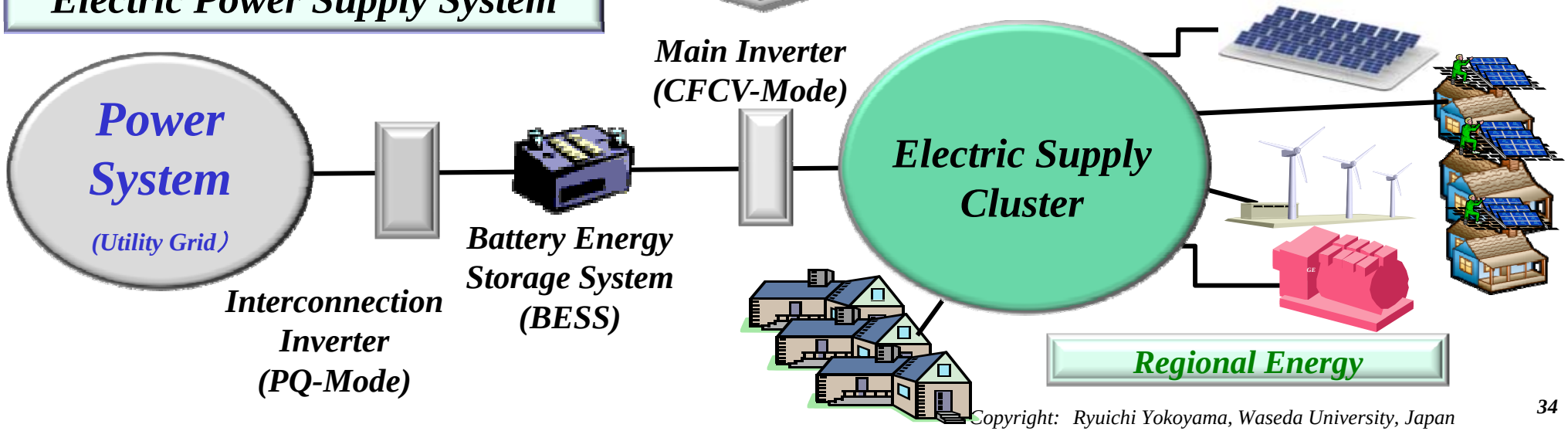

Copyright: Ryuichi Yokoyama, Waseda University, Japan

Objectives and Features of Expandable Grids

Objectives and Features

・Structure of Cluster-based Expandable Smart Distribution Grids

- Construction of an appropriate scale distribution grid (The first cluster)
- Expansions of clusters according to increase of regional demands (The second cluster)
- Interconnections of clusters by electrical routers (Tie lines and Inverter control)

・Features of Cluster-based Expandable Smart Distribution Grids

- Effective Use of Sustainable energies
- DC/AC Distribution to the region
- Coordinated Use and Operation of Heat Storage and BESS
- Rapid Charging to Electric Vehicles

・The Role of the Proposed grid as Social Infrastructure

- New Power Supply Social Infrastructure for Developing Areas and Regions
- Medium Scale Power Supply for Islands and Remote areas
- Power Supply for Non-electrified Regions in Developing Countries and Emergency Supply

- Smart Grids for coping with Large Scale Installations of Sustainable Energy
- Expandable Power Supply System in accordance with Regional Development
- Contribution to Stable Power Supply, Energy Conservation and CO_2 Reduction

Copyright: Ryuichi Yokoyama, Waseda University, Japan

Interconnection and Expansion of Cluster-Oriented Smart Distribution Grid

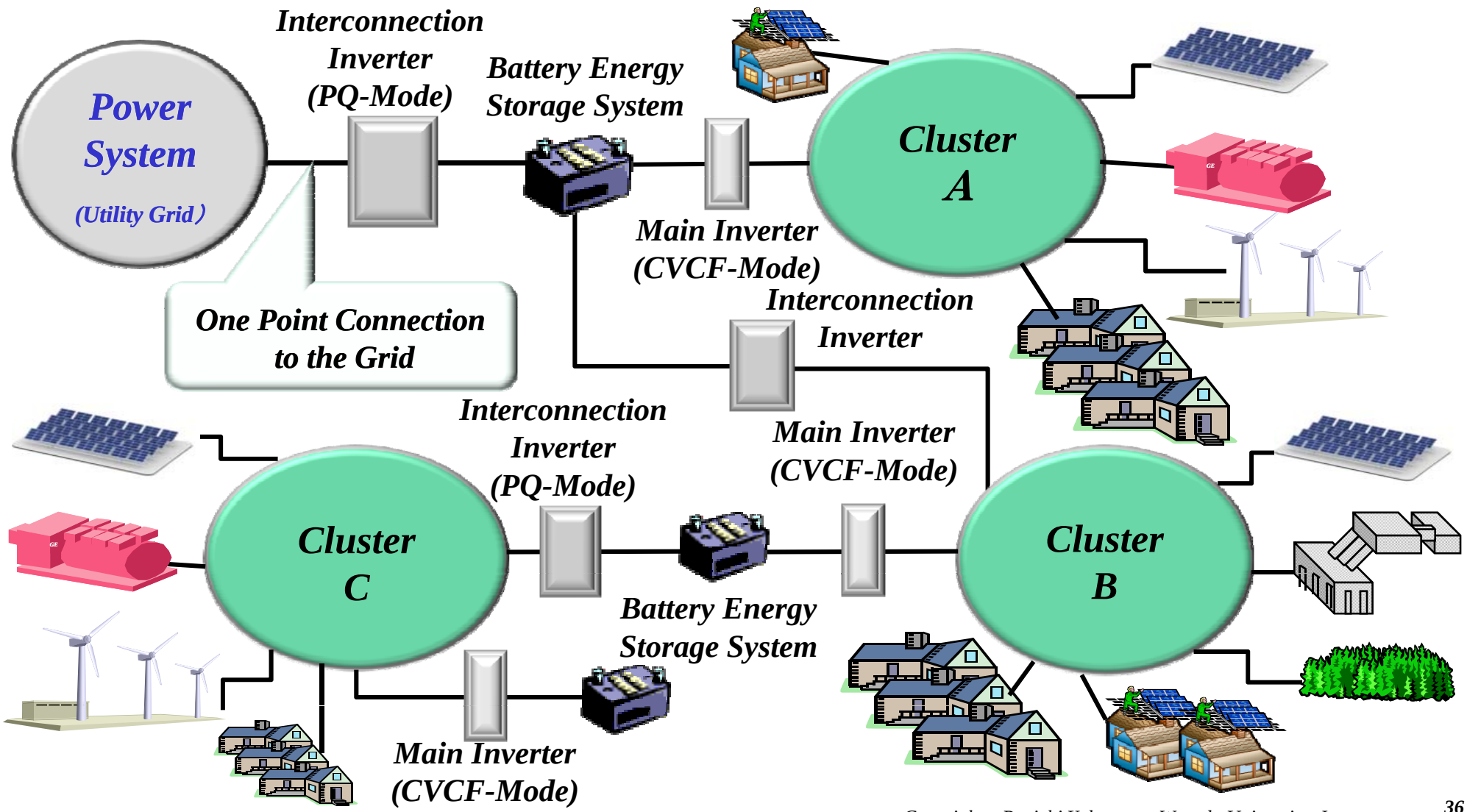

Copyright: Ryuichi Yokoyama, Waseda University, Japan

Electric and Heat Load Leveling in Cluster

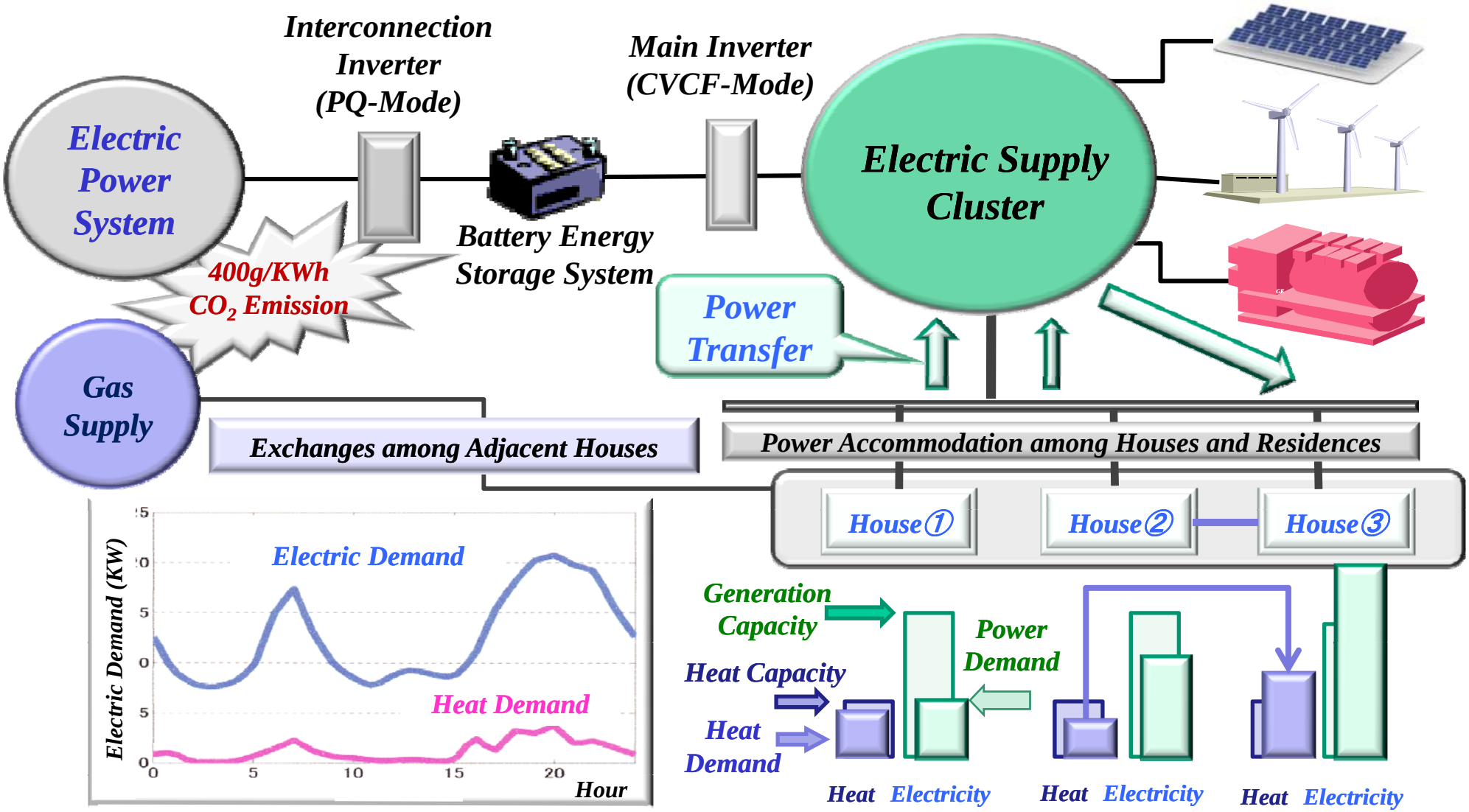

Daily Electric and Heat Load Profile of Houses or Condominium

Copyright: Ryuichi Yokoyama, Waseda University, Japan

The Role of BESS in Clusters

- Generators
- Fuel, Boilers

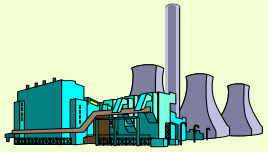

- BESS
- Sustainable Energy

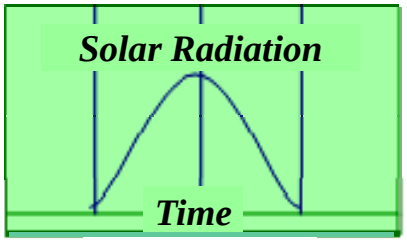

Battery Storage

Load Profile

Charge

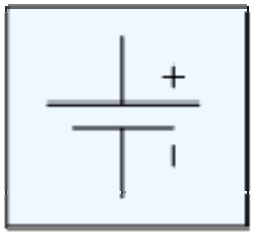

Discharge

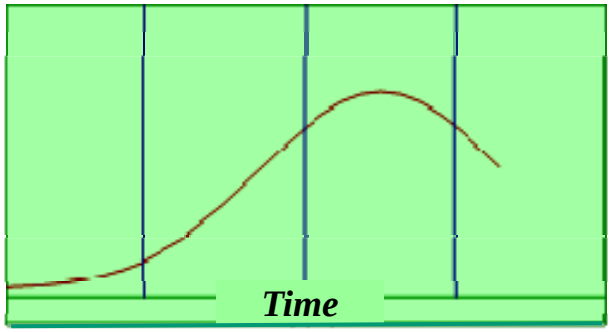

PV Generation

Prime Mover
Fuel, Boilers

Rotating Inertia
Turbines, Generators

DER
Gas Engines, Micro Hydro

Copyright: Ryuichi Yokoyama, Waseda University, Japan

Cluster Frequency Control by BESS inverter

Cluster frequency is decided and regulated by BESS inverter.

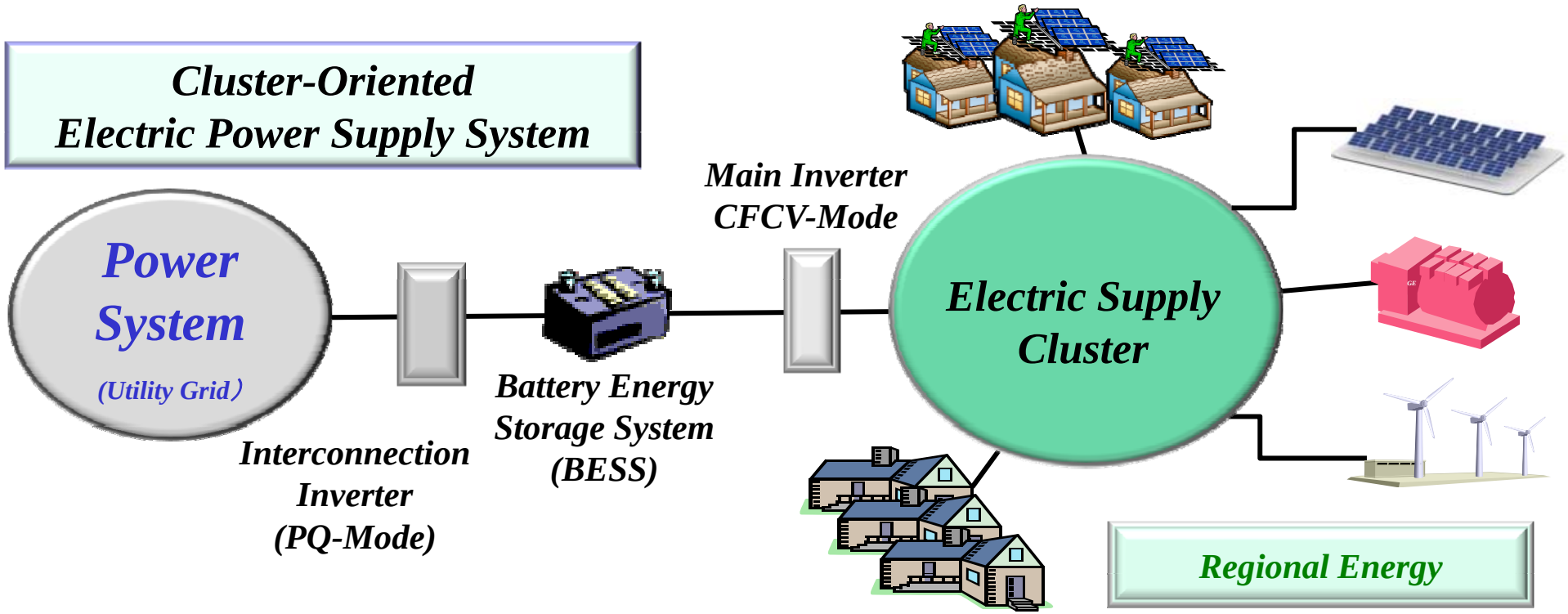

Control Mode	System States	Schemes
PQ-Mode	Interconnected Operation	Active power (P) and Reactive power (Q) control
CVCF-Mode	Isolated Operation	Constant Voltage and Frequency control

Copyright: Ryuichi Yokoyama, Waseda University, Japan

Measurements and Inverter Controls in Battery Energy Storage System

Leveling of Charged Energy between Clusters by Tie Line Power Flow Control (Demand/Supply Power Transfer Control)

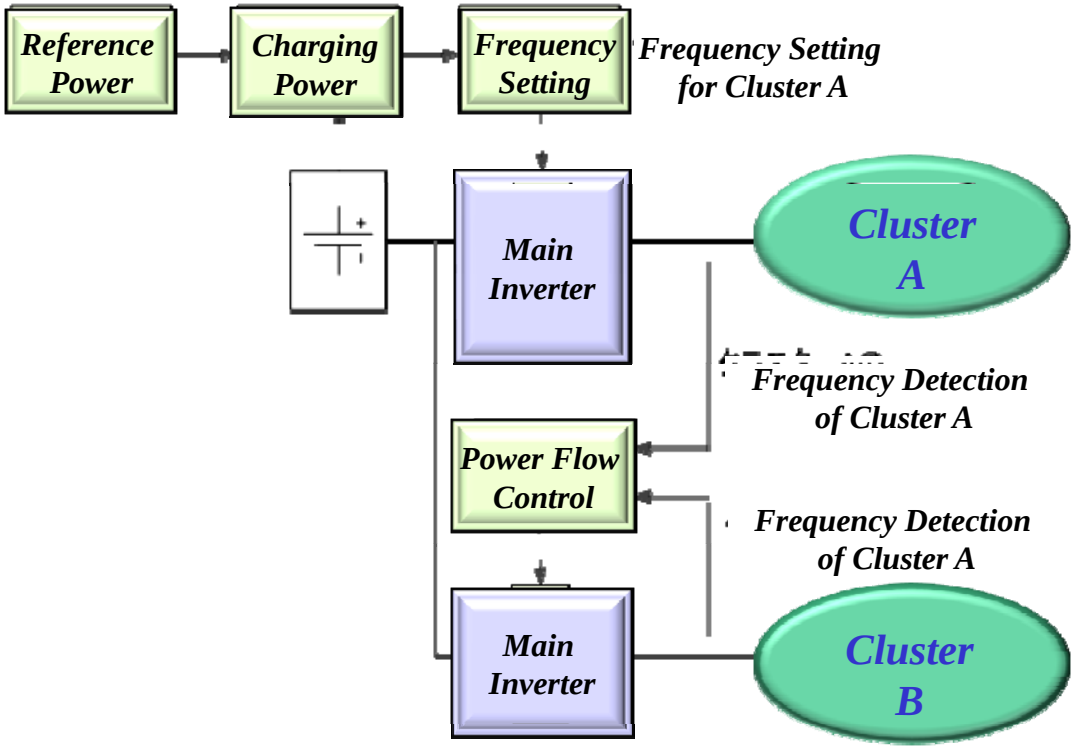

Reactive Power Droop Control For BESS and Inverter

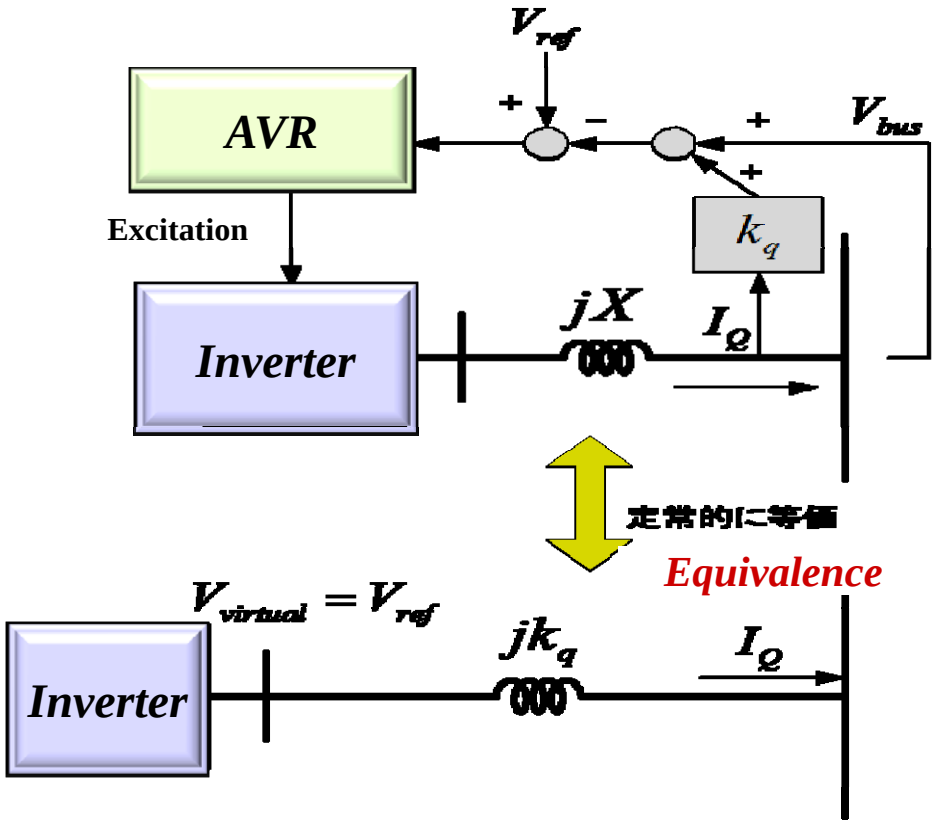

Copyright: Ryuichi Yokoyama, Waseda University, Japan

Load Leveling by Power Transfer between Clusters

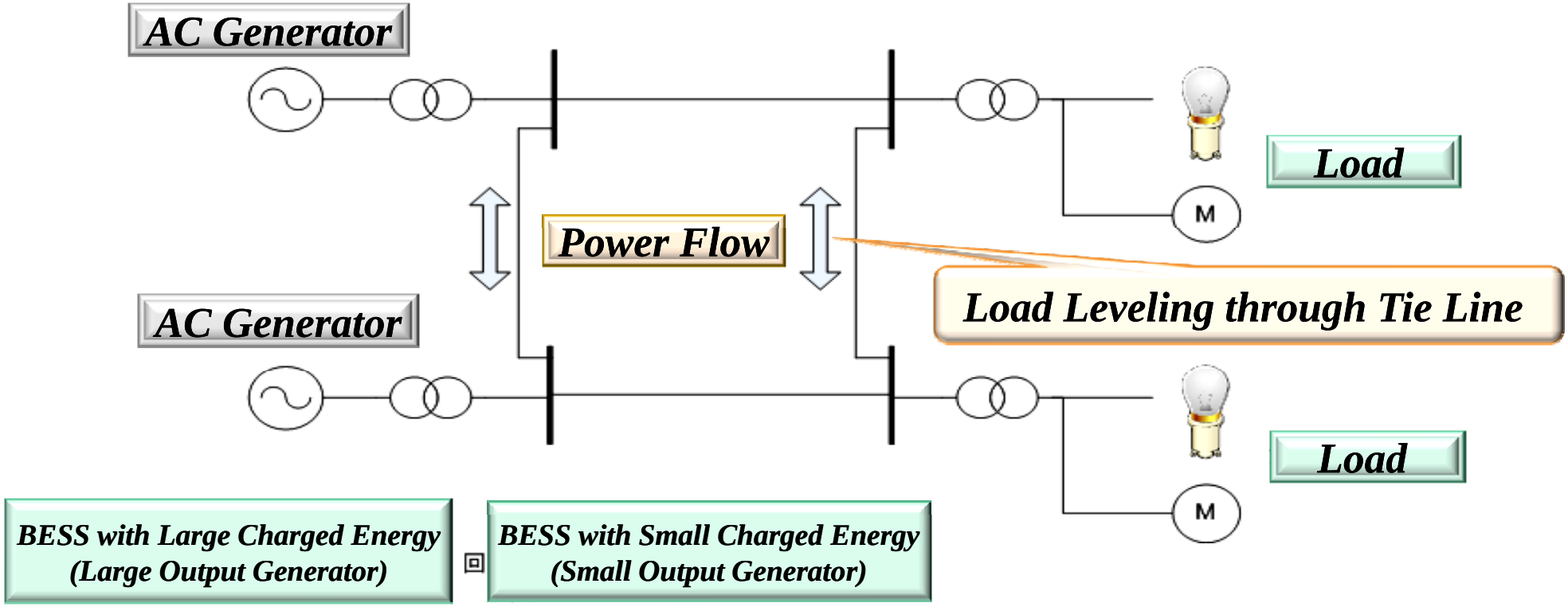

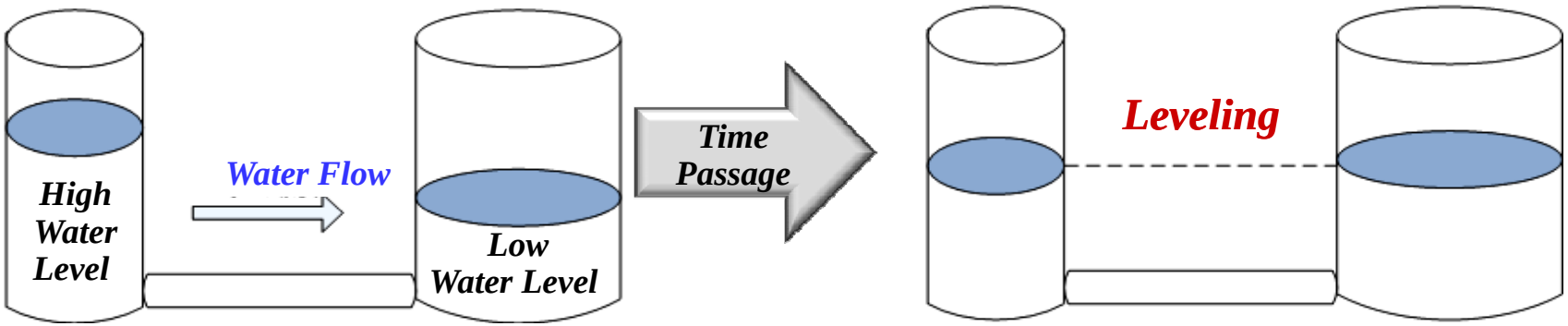

Copyright: Ryuichi Yokoyama, Waseda University, Japan

Expandable Smart Distribution Grids for Efficient Use of Sustainable Energies

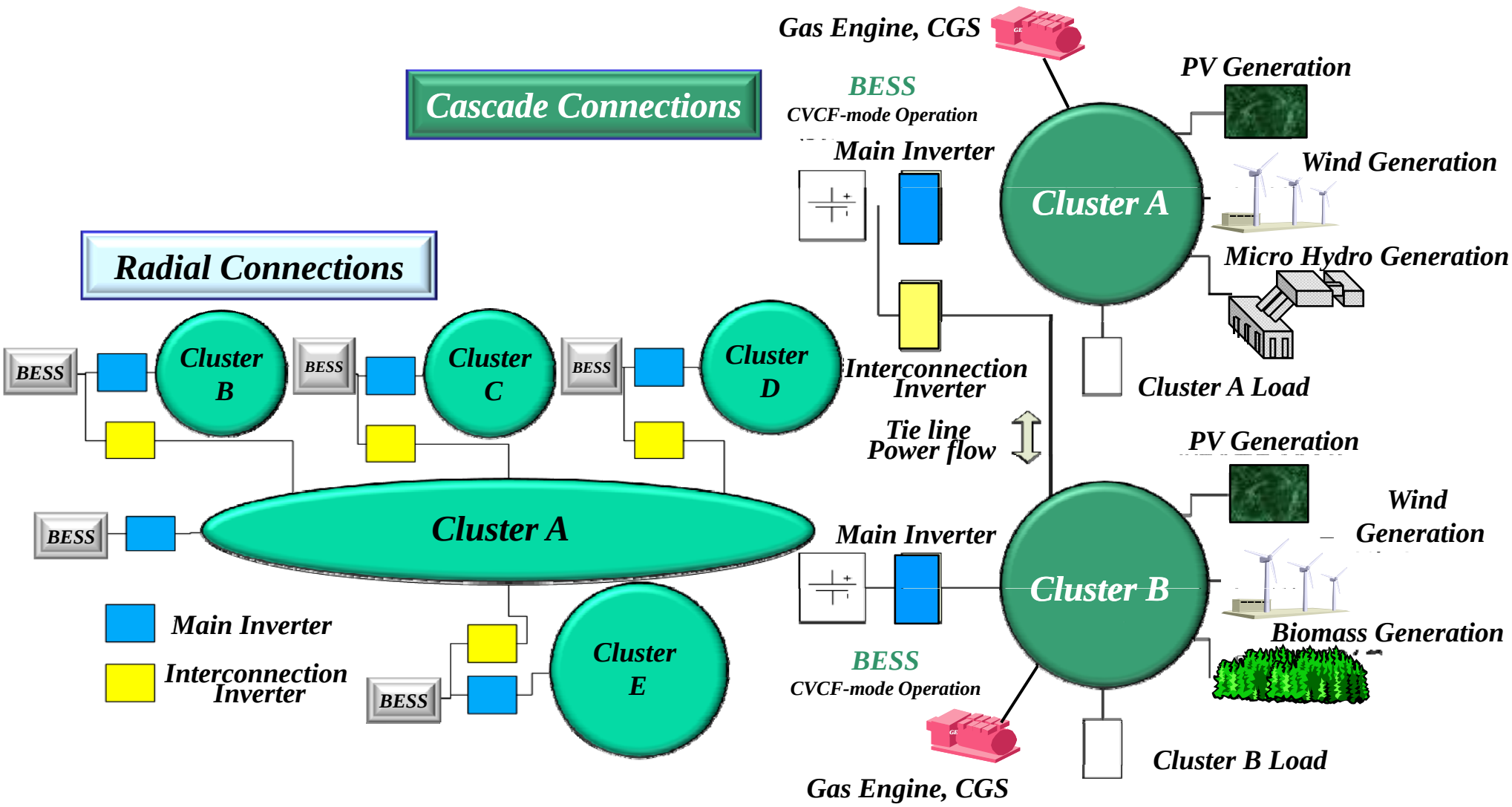

Copyright: Ryuichi Yokoyama, Waseda University, Japan

Comparison of Conventional Power Systems and Future Smart Distribution Grids

Items	Current Grid	Micro Grid /Smart Grid	Cluster Expandable Grid
Generation Resources	Large Scale Thermal, Hydro and Nuclear Plants	Controllable Generation Resources including Small Gas Engine, Fuel Cell, Micro Hydro, and PV, Wind	Efficient Use of Sustainable Energies, such as ,PV, Wind, Micro Hydro
Storage System	Pumped-up Hydro Storage	Battery Energy Storage System (BESS) is Indispensable	
		Coordinated Operation of Power System Apparatus and Controllable DER	BESS Plays an Important Role to Produce the Maximum Output from Sustainable Energies
Interconnection	Interconnected by Tie lines	Continuous Connection to the Utility Grid and Isolated Operation in Case of Fault	Usually Independent Operation Interconnections between Clusters
Power Transfer	Among Utilities	No Power Transfer between Micro Grids	Power Transfer through Routers between Clusters
Dispatching	AC	AC	AC (Present) and DC (Future)
Size	Extremely Large Scale	Medium/Small Scale	Small Scale
Expandability	Poor Long Term Planning	Medium Short Term Planning for Stand Alone Plant	Large Expandable Autonomously if Needed
Usage Purpose	Large Scale and Trunk Infrastructure	High Reliable Future Power system (Bi-Directional Communication, Demand Response, Asset Management)	Power Supply to Remote Areas, Developing regions, Islands and EV Countermeasures for Disaster

Copyright: Ryuichi Yokoyama, Waseda University, Japan

Implementation of Cluster-Oriented Smart Grid in Waseda Honjyo Campus

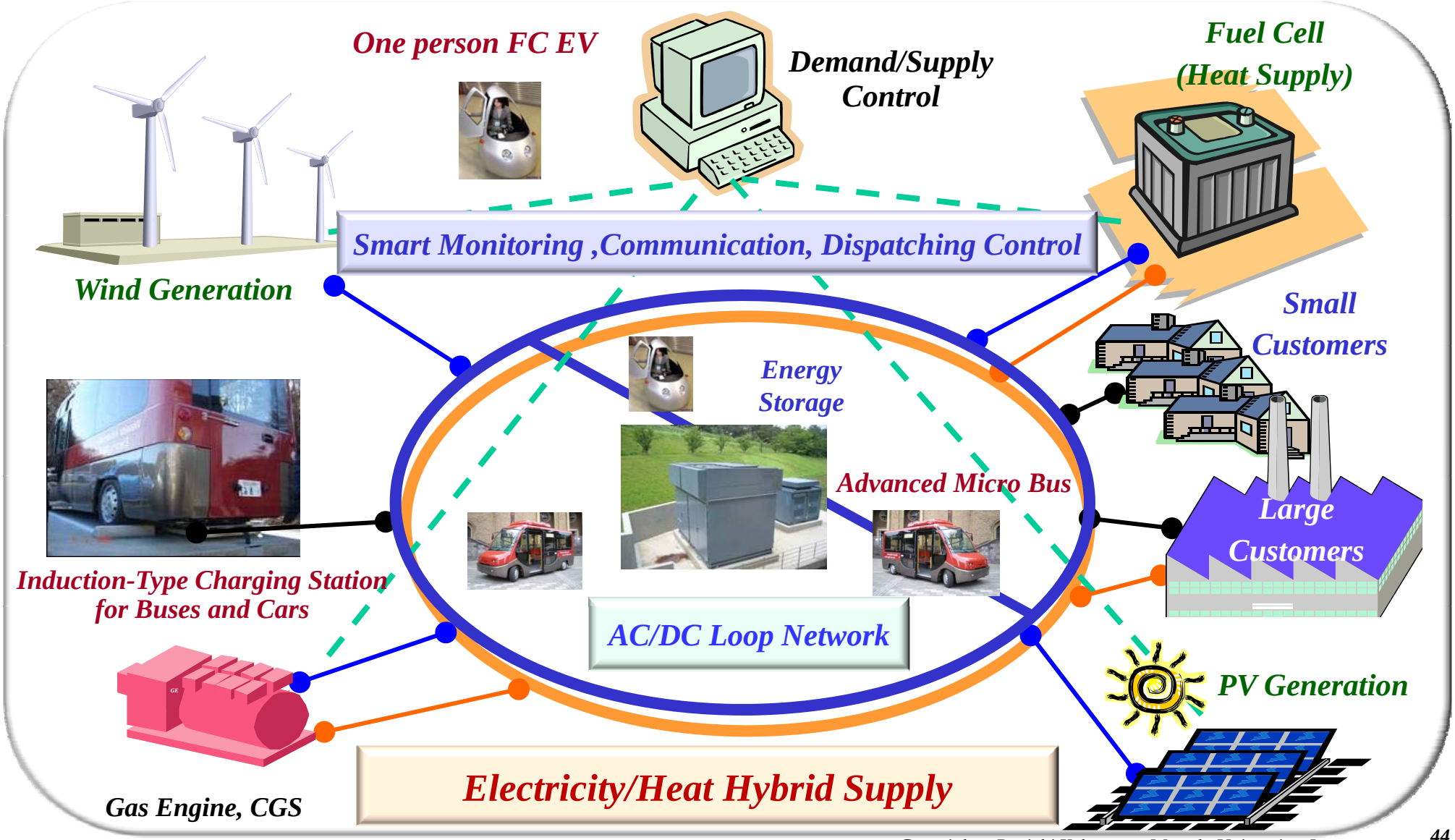

Copyright: Ryuichi Yokoyama, Waseda University, Japan

Key Technology for Expandable Smart Grids

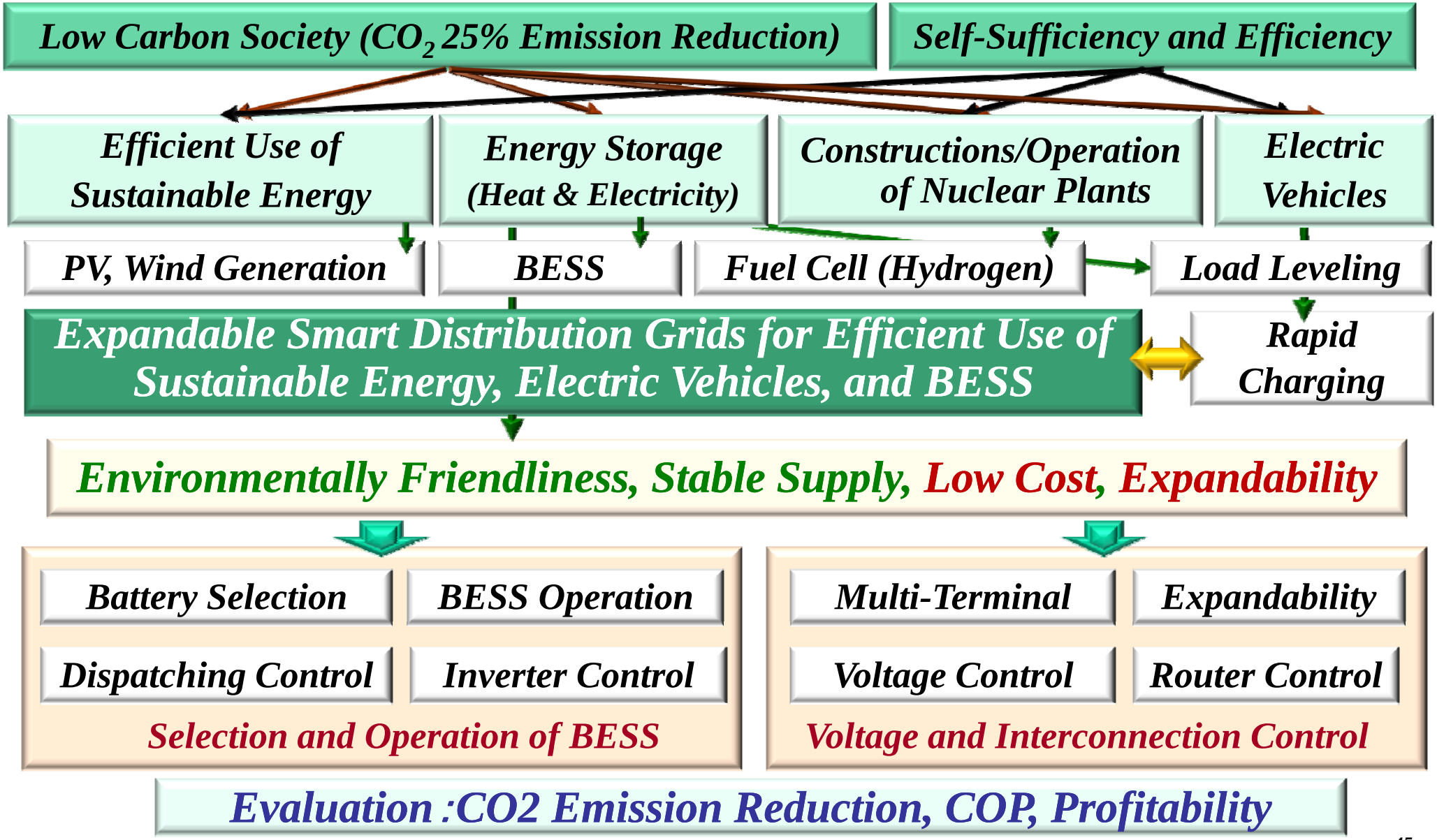

Copyright: Ryuichi Yokoyama, Waseda University, Japan

Expandable Cluster-Oriented Smart Grid

～Countermeasures for Natural Disaster and Restoration～

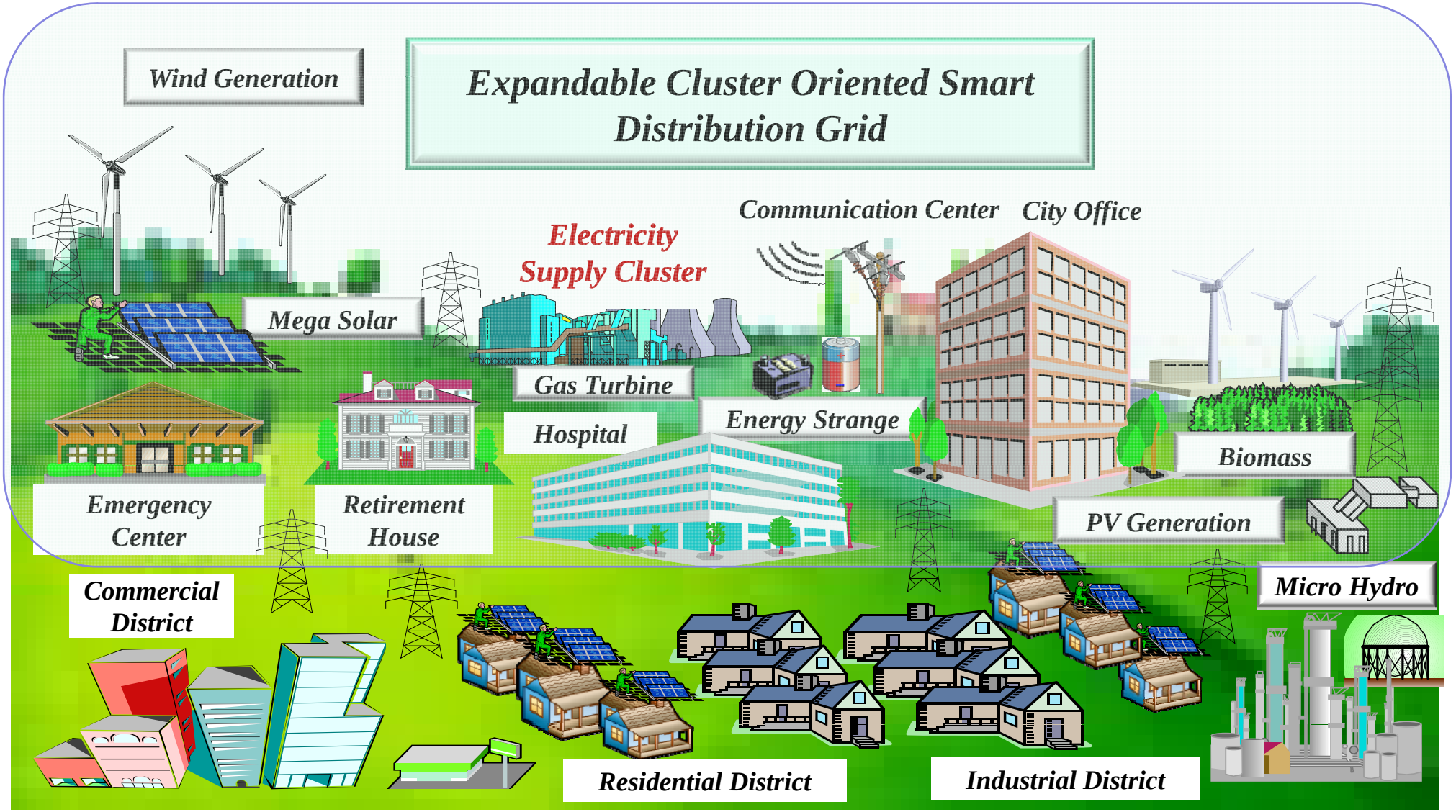

Copyright: Ryuichi Yokoyama, Waseda University, Japan

Coordination of Goals of Electric Power Secter for Stable Energy Supply

Objectives Stable, Reliable, and Clean Power Supply for All Customers with Reasonable Price

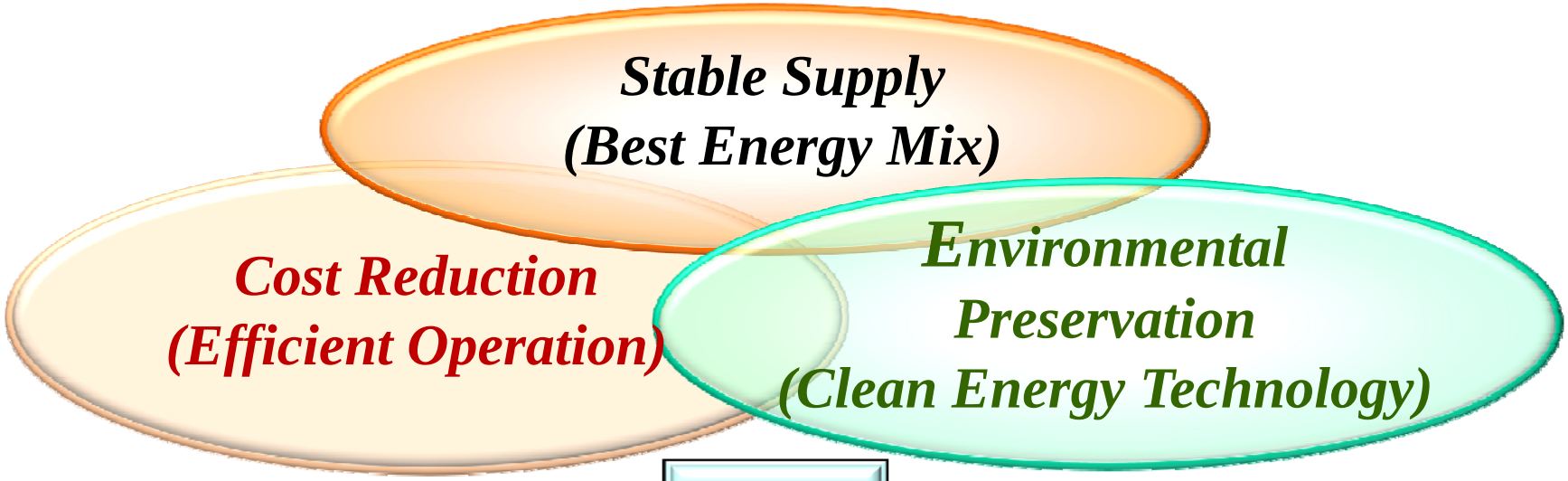

- Energy Saving, Peak Cut and Load Leveling
- Efficient Use of Facility/Sustainable Energy
- Resiliency and Reduction of Cost

→ **Expandable Smart Grid**

Copyright: Ryuichi Yokoyama, Waseda University, Japan

Thank you for your attention

Ryuichi YOKOYAMA
横山　隆一

Waseda University
早稲田大学
yoko@eei.metro-u.ac.jp

Copyright: Ryuichi Yokoyama, Waseda University, Japan