MODES Network Simulator

Project -Cases examples

Karel Máslo (maslo@ceps.cz)

http://www.modesinfo.com

Short term dynamic
- fault and clearing by scenario

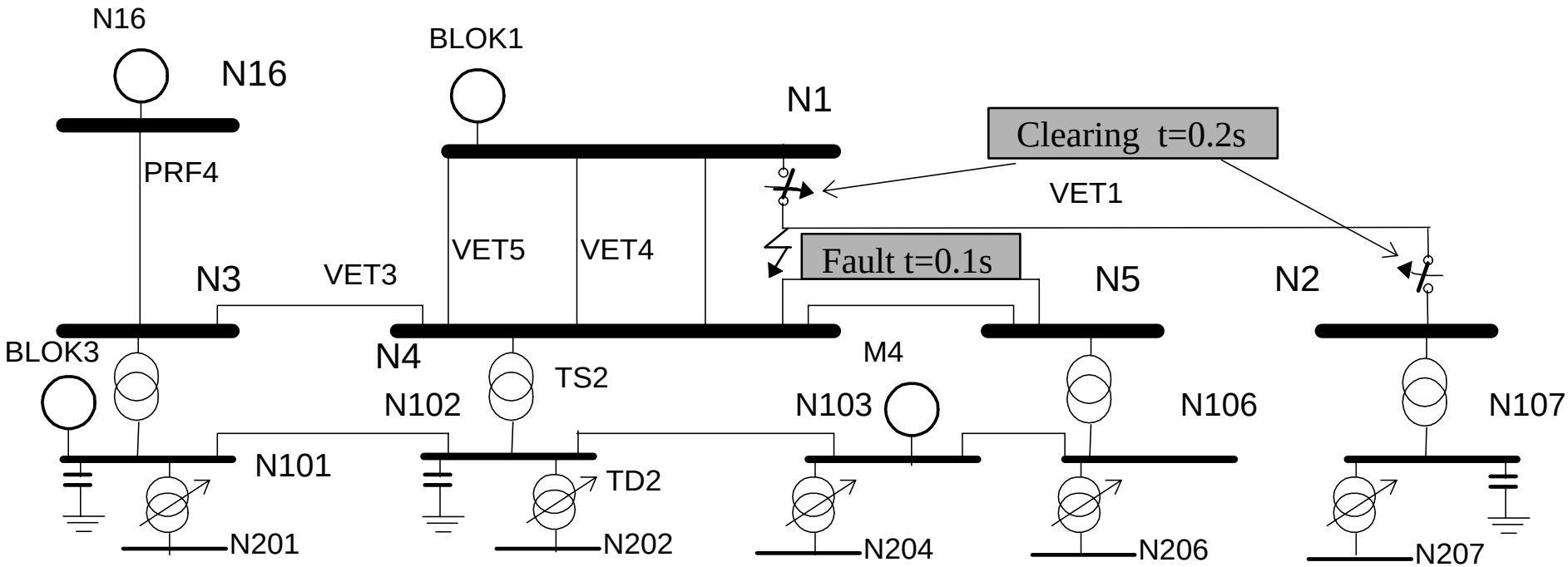

Short term dynamic
- fault and clearing by automatics

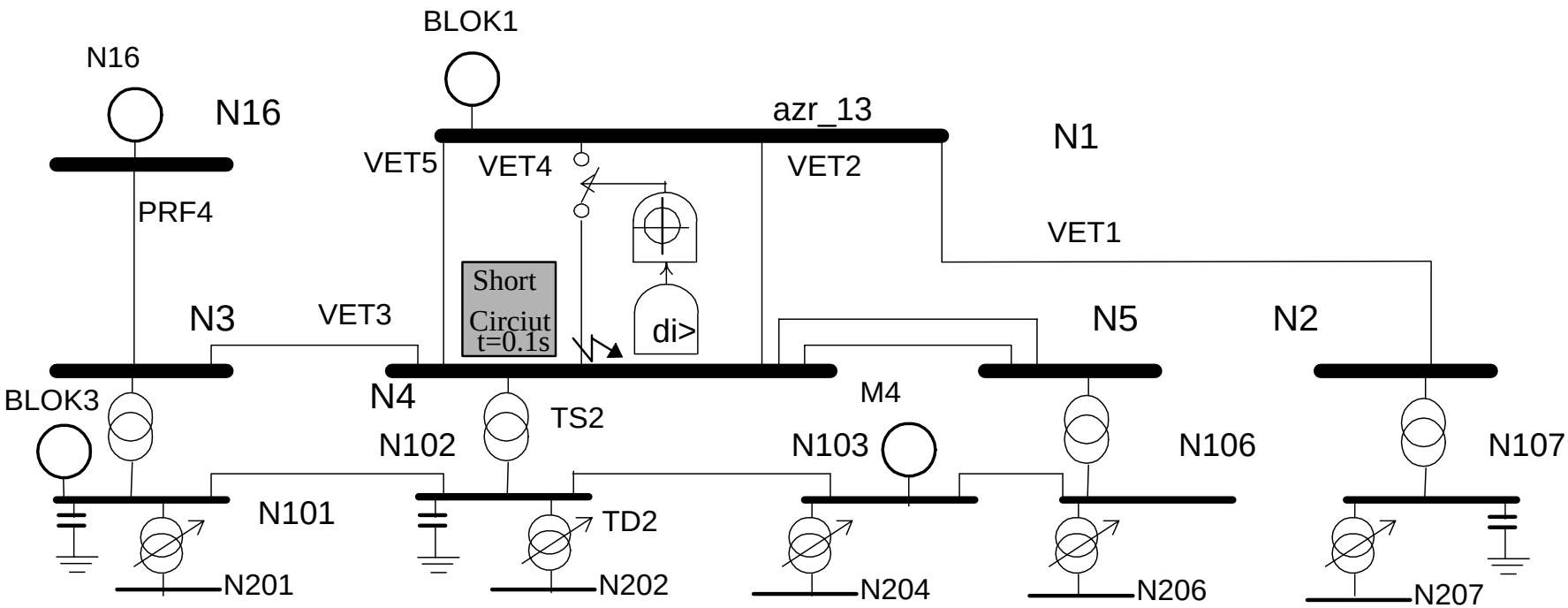

Short term dynamic
- fault and clearing by a logic

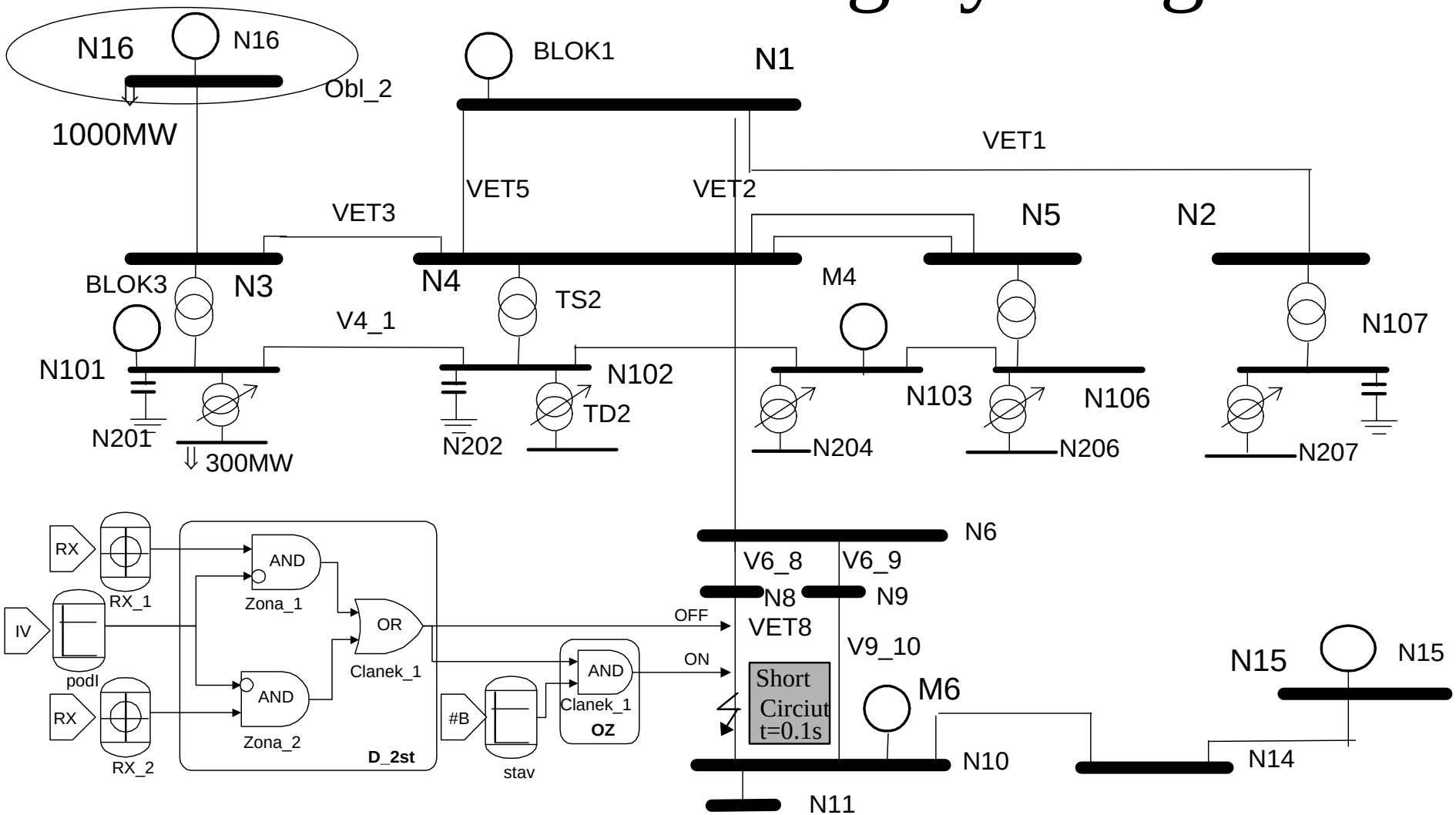

Mid- term dynamic - unit outage primary frequency control

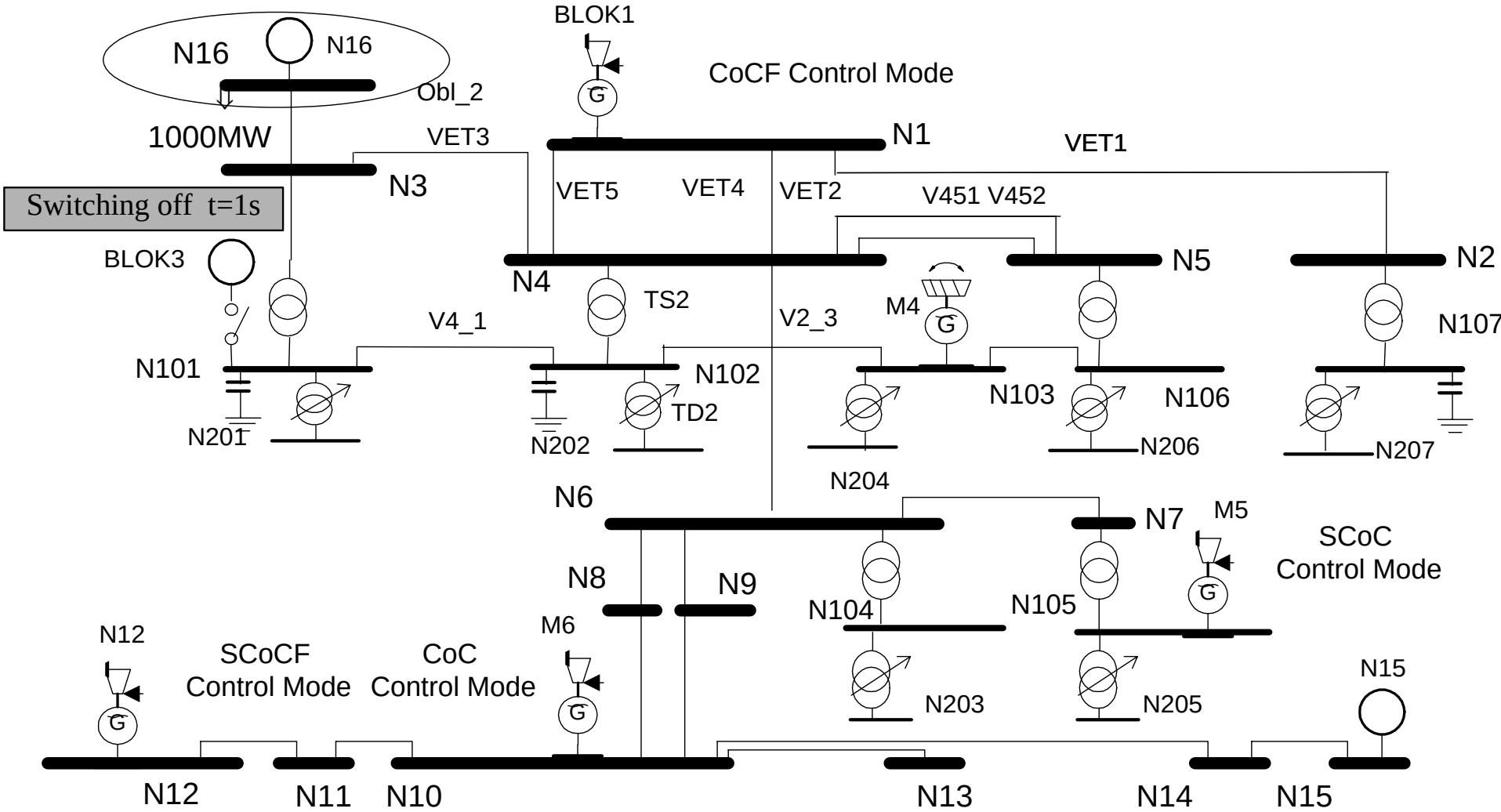

Long- term dynamic - unit outage load frequency control

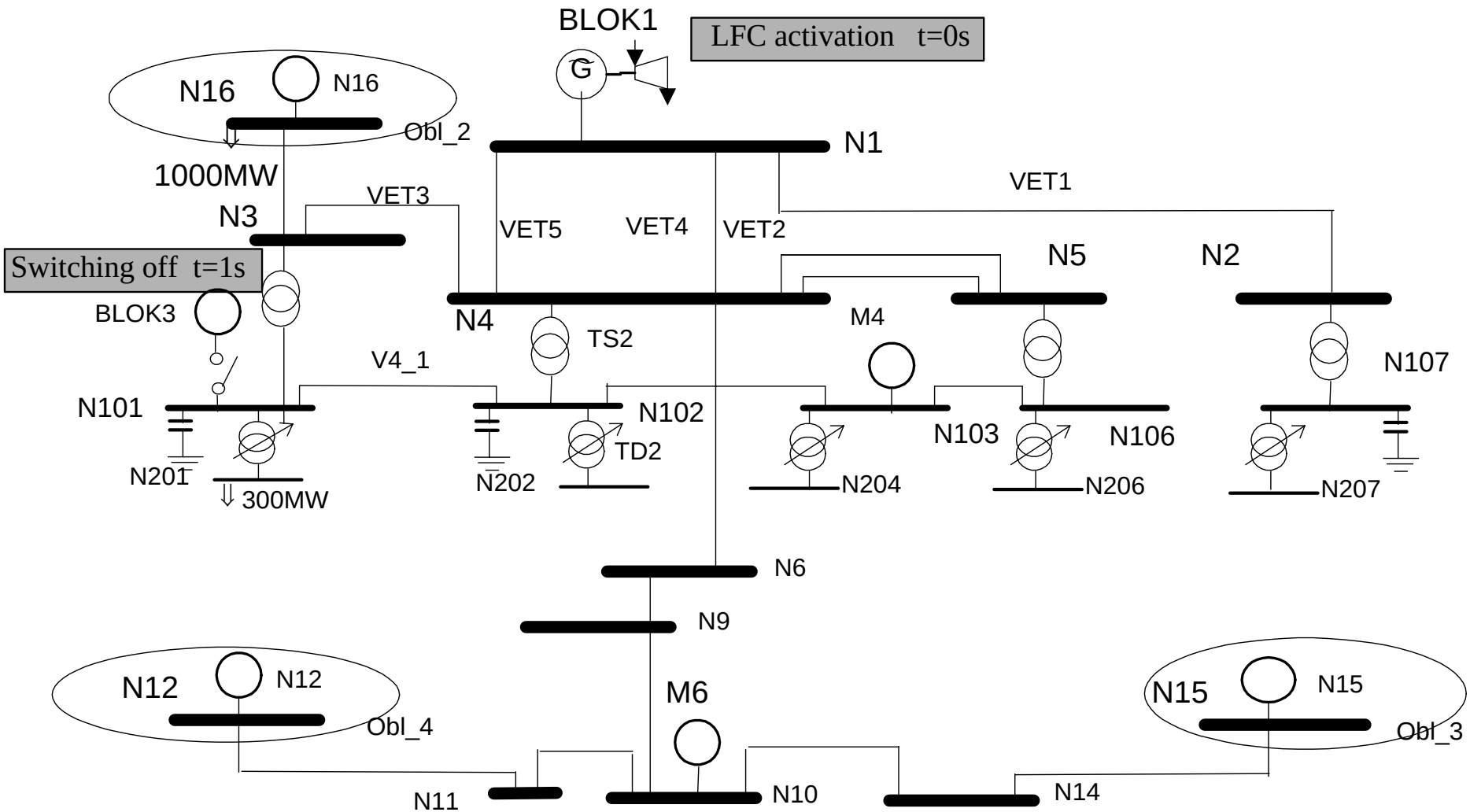

Long- term dynamic Voltage collapse

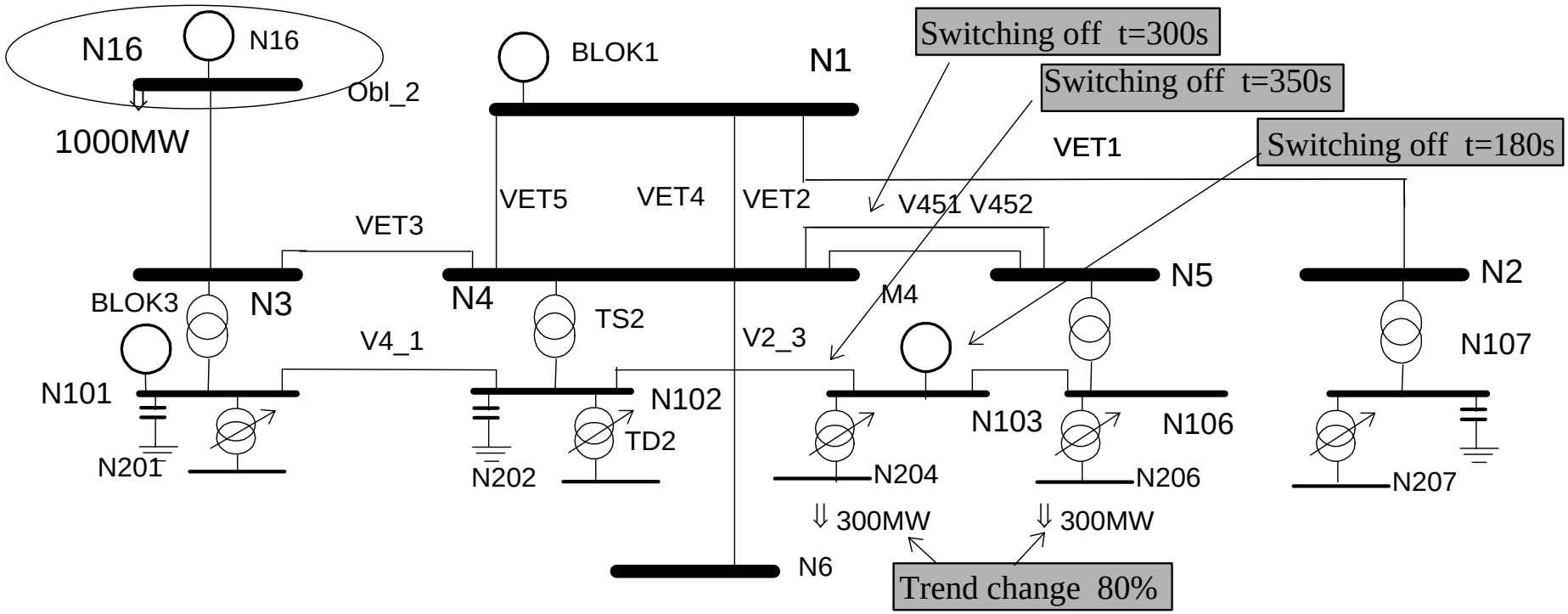

Island operation -frequency collapse

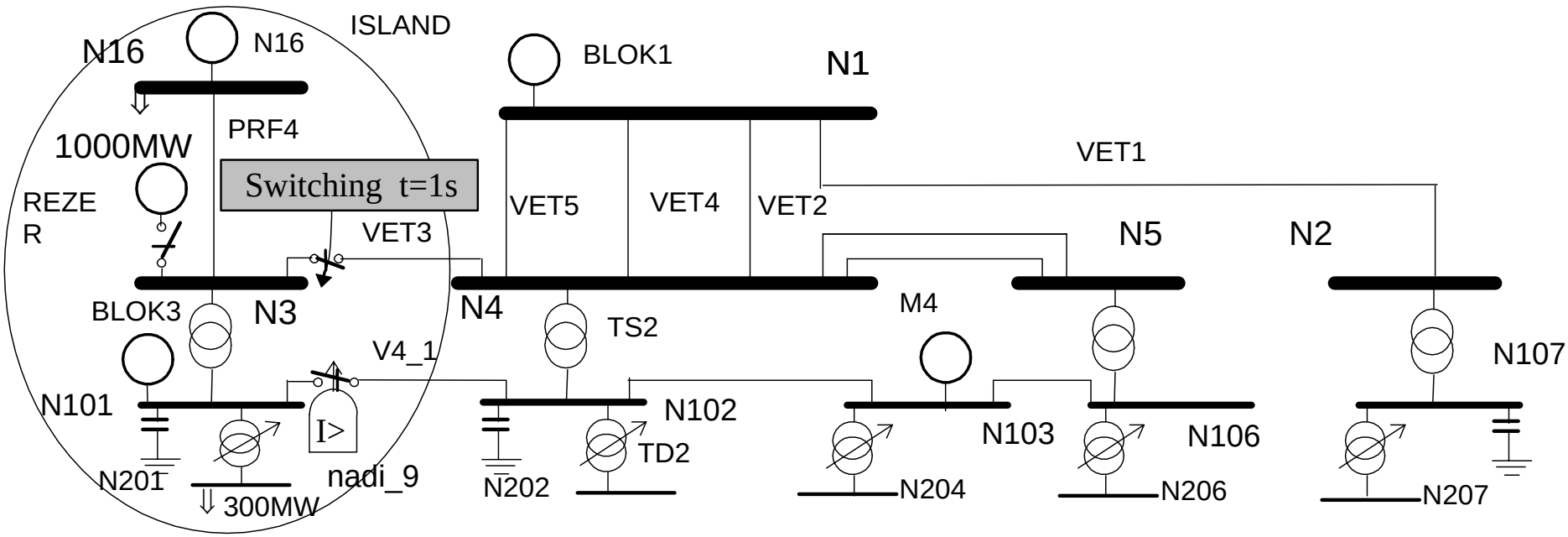

Asynchronous motors
Back-up self consumption

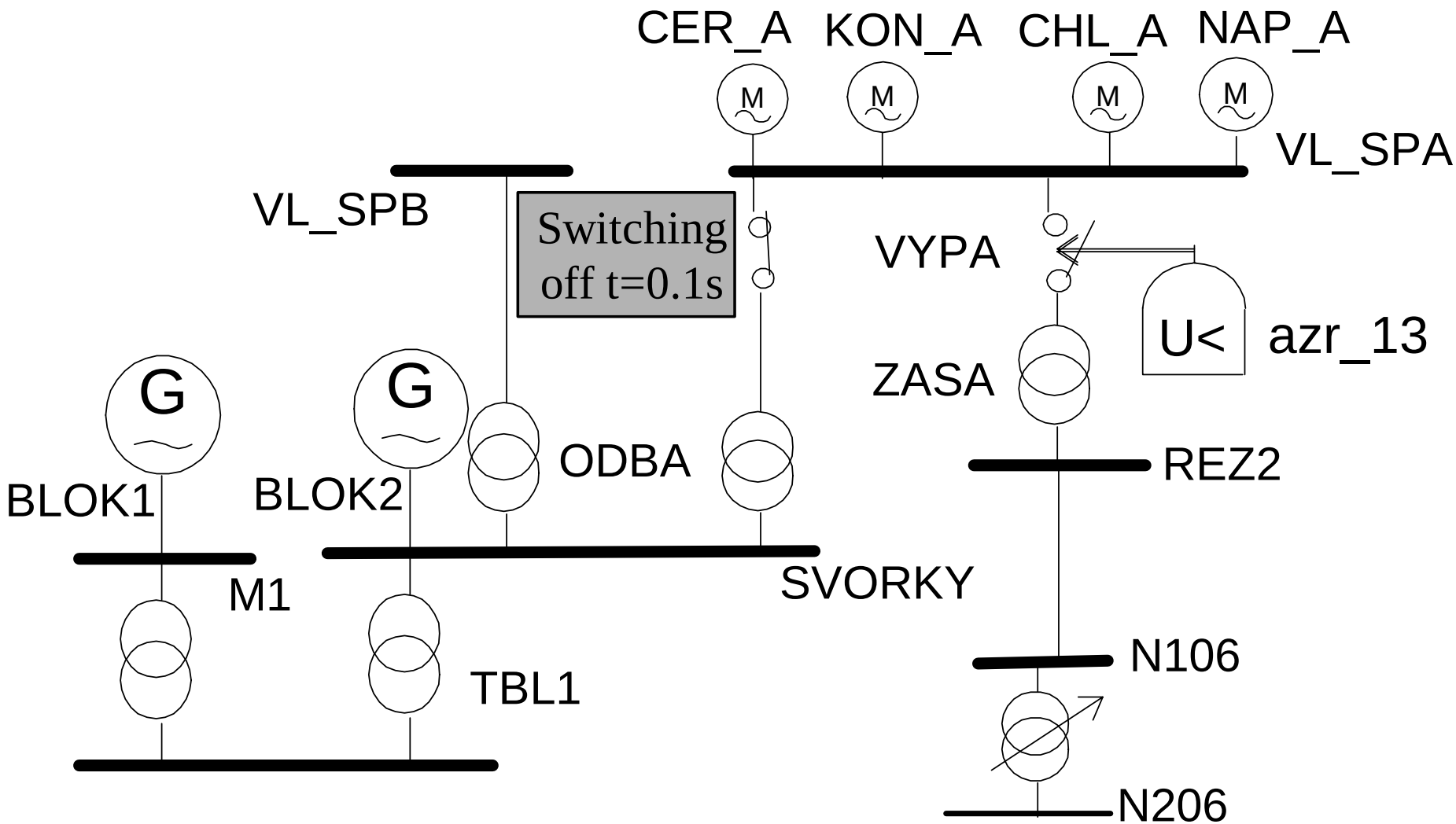
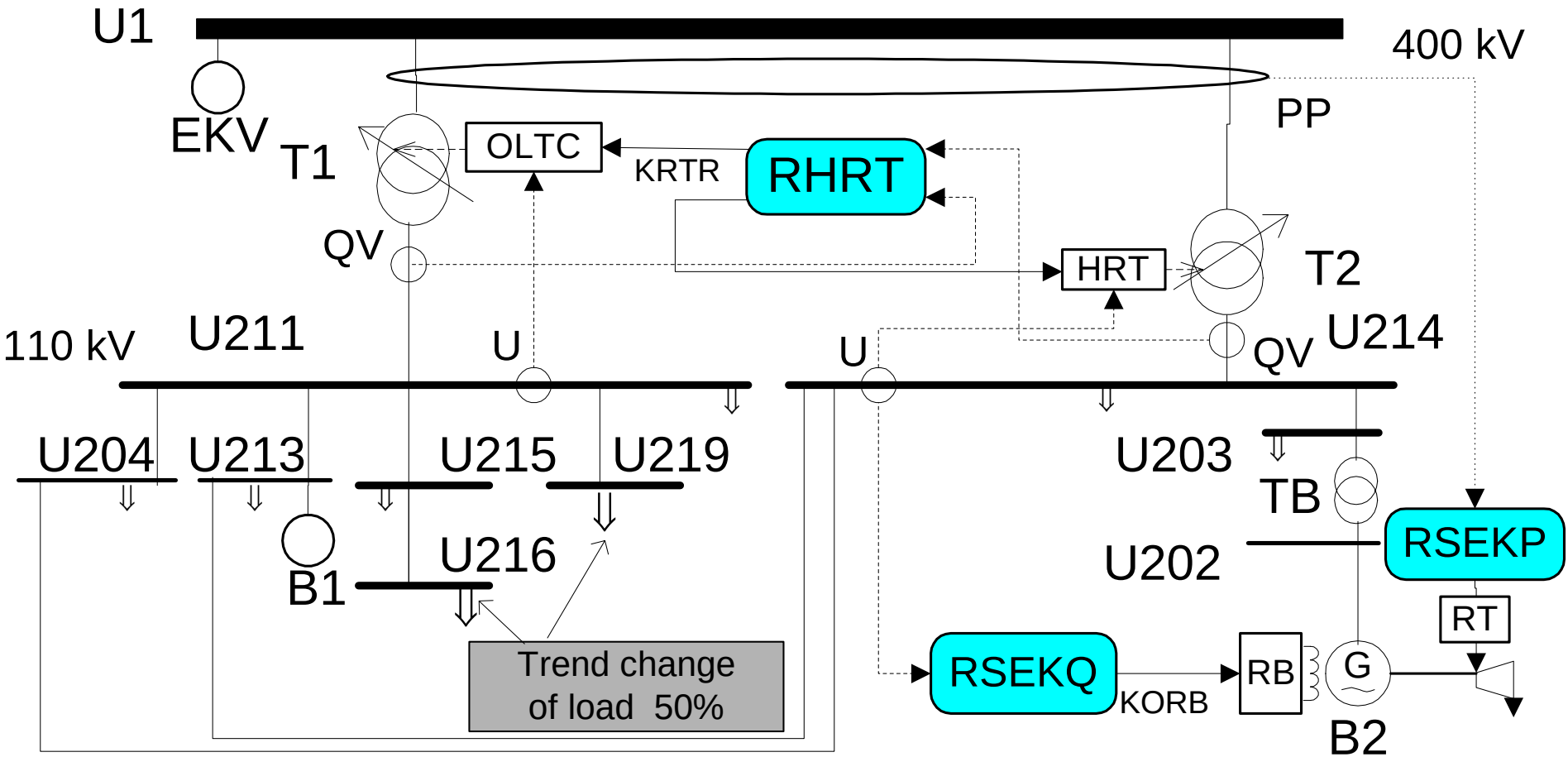
External regulators
Correction of LFC, Secondary P and Q control