# Modeling of Power System Dynamic

# MODES Network Simulator

**Karel Máslo (maslo@ceps.cz)**

**www.modesinfo.com**

# Power system modelling

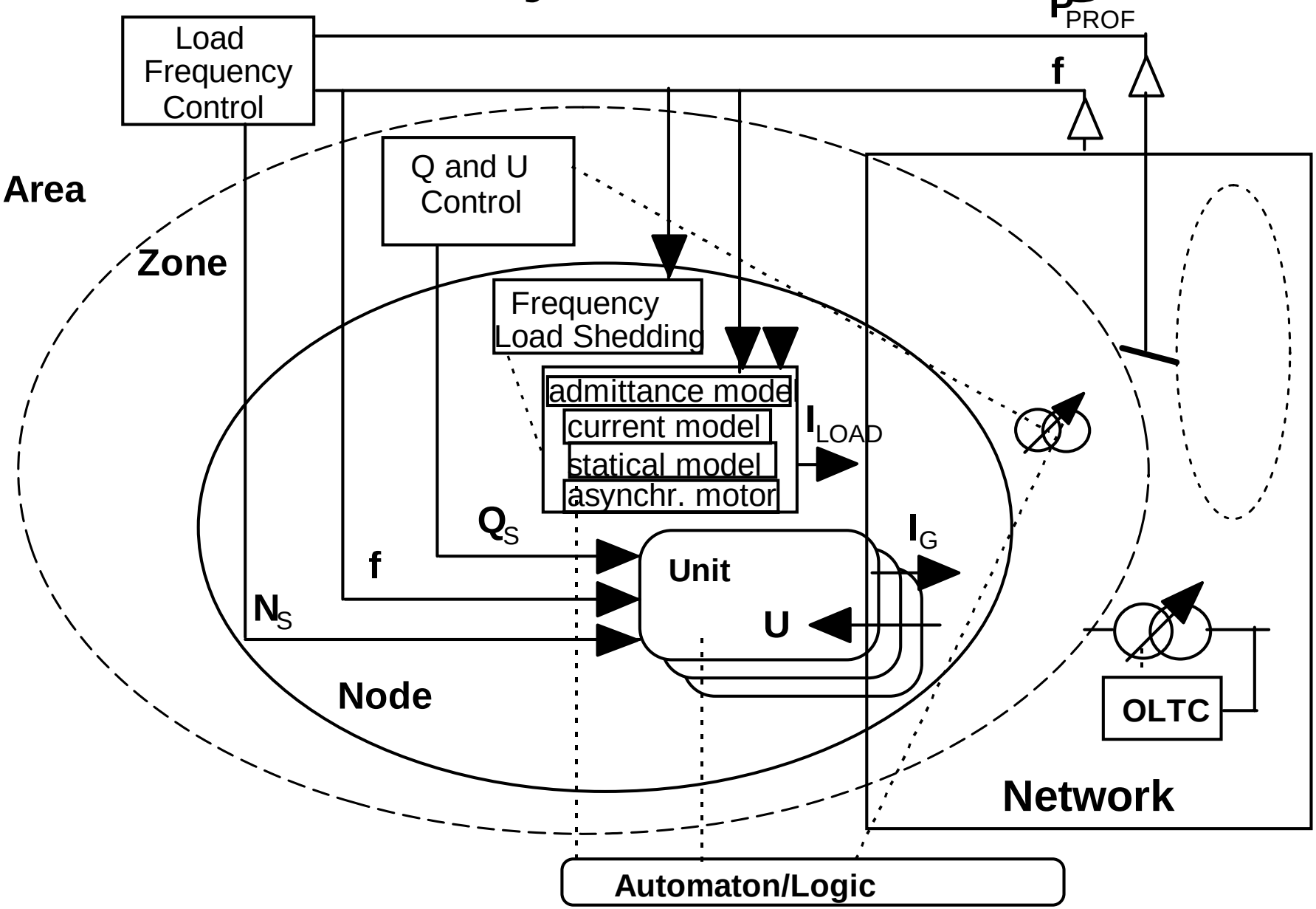

# Unit modelling

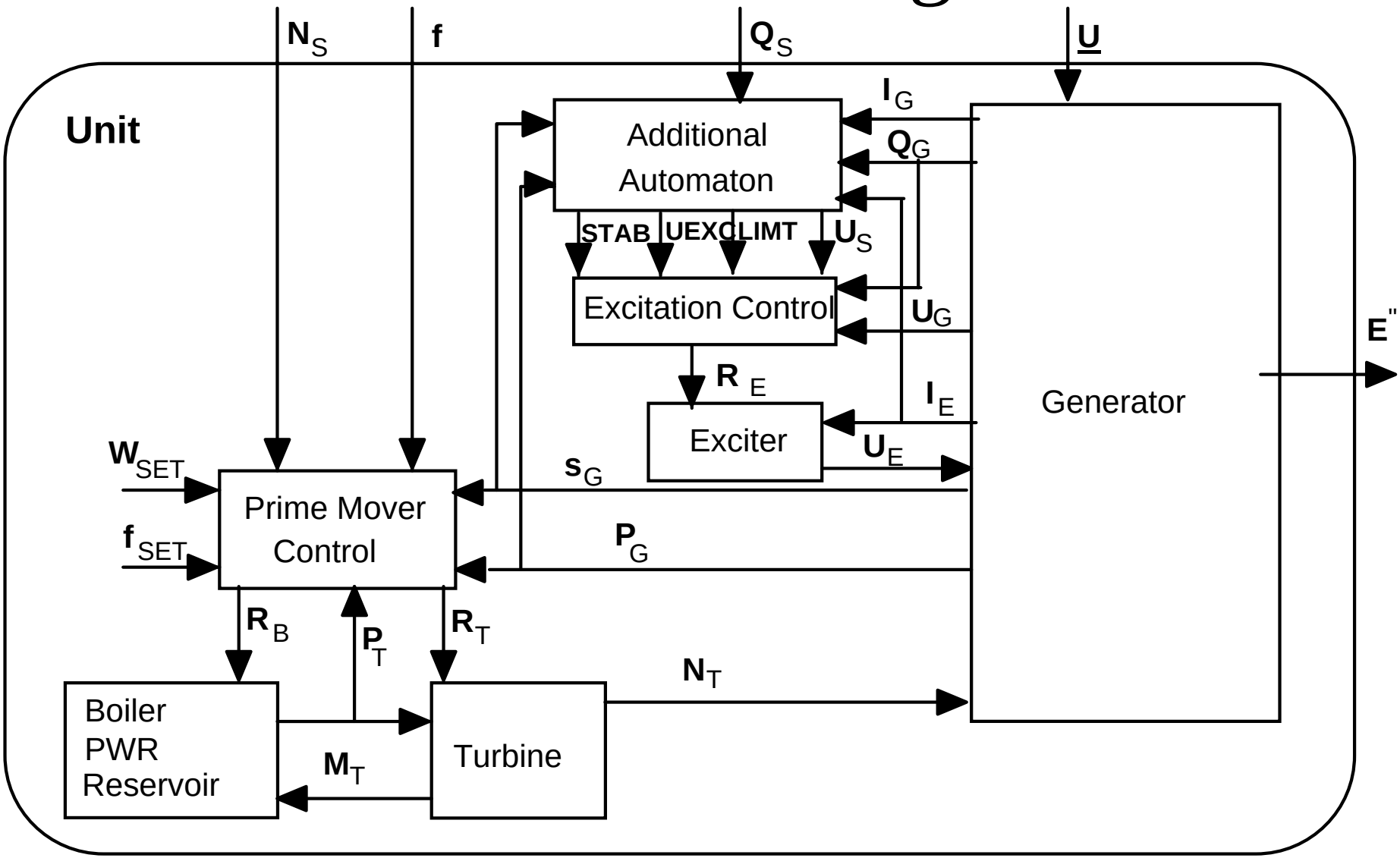

# Exciter modeling

Rotating DC Exciter

**DC_1**

Alternator Supplied Rectifier

**AC_1**

Alternator Supplied Controlled Rectifier

**AC_4**

Potential Source Controlled Rectifier

**ST_1**

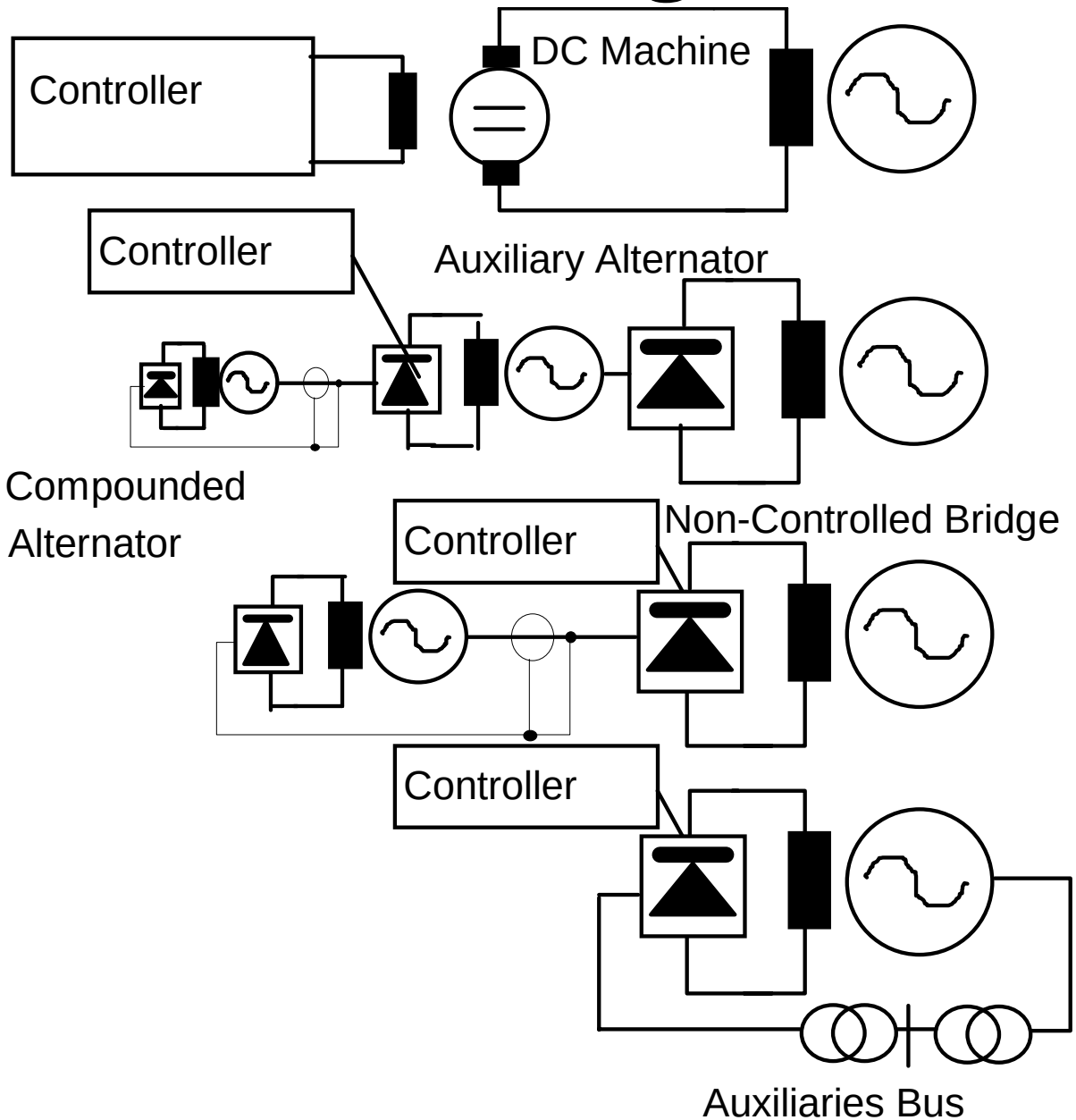

# Common excitation regulator model

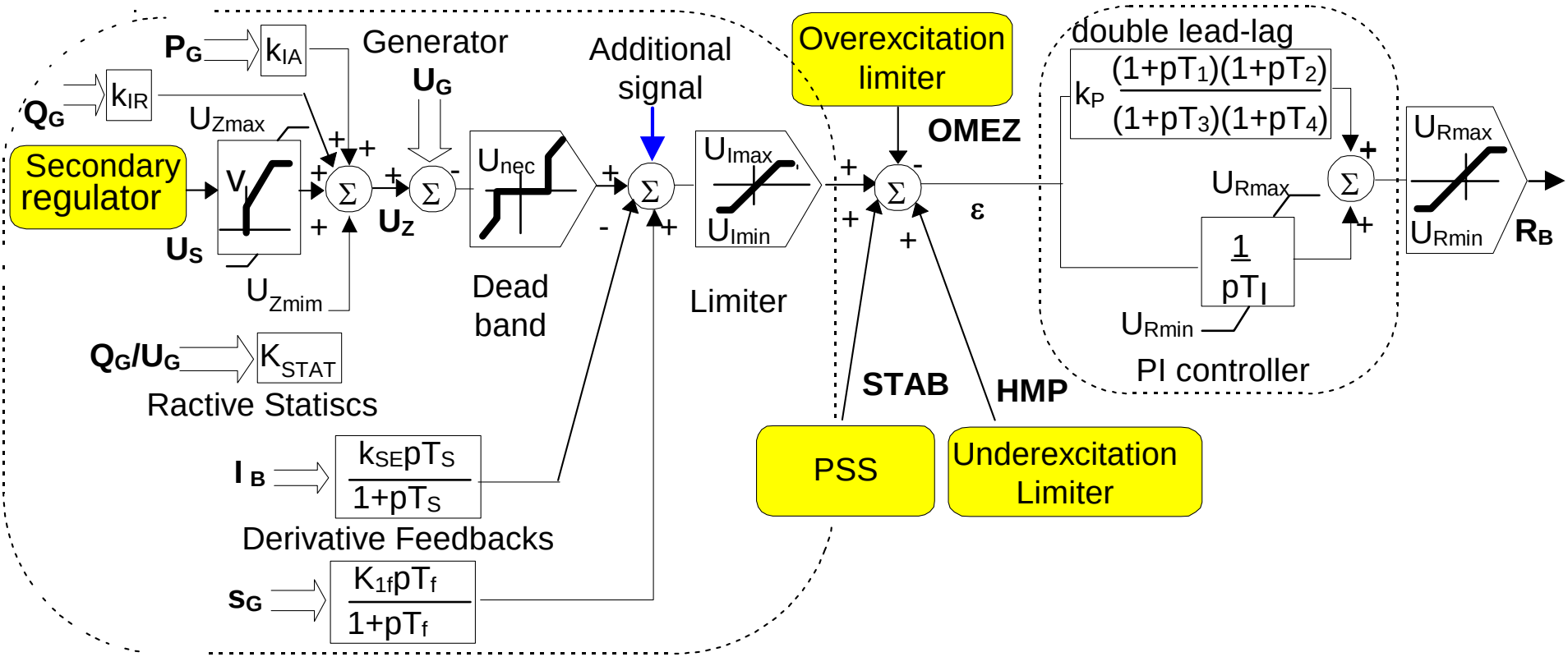

# Steam turbine model

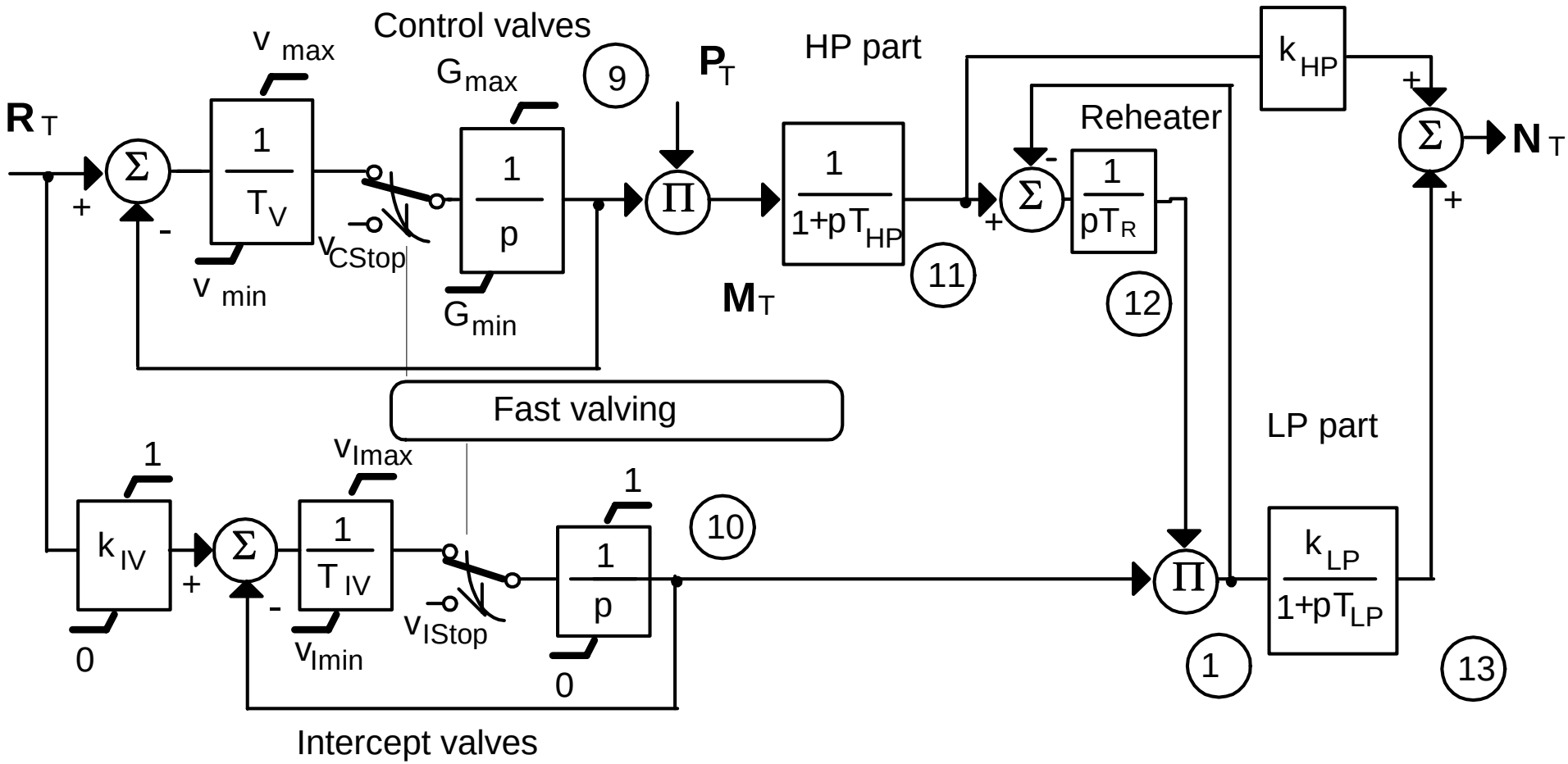

# Hydro turbine model

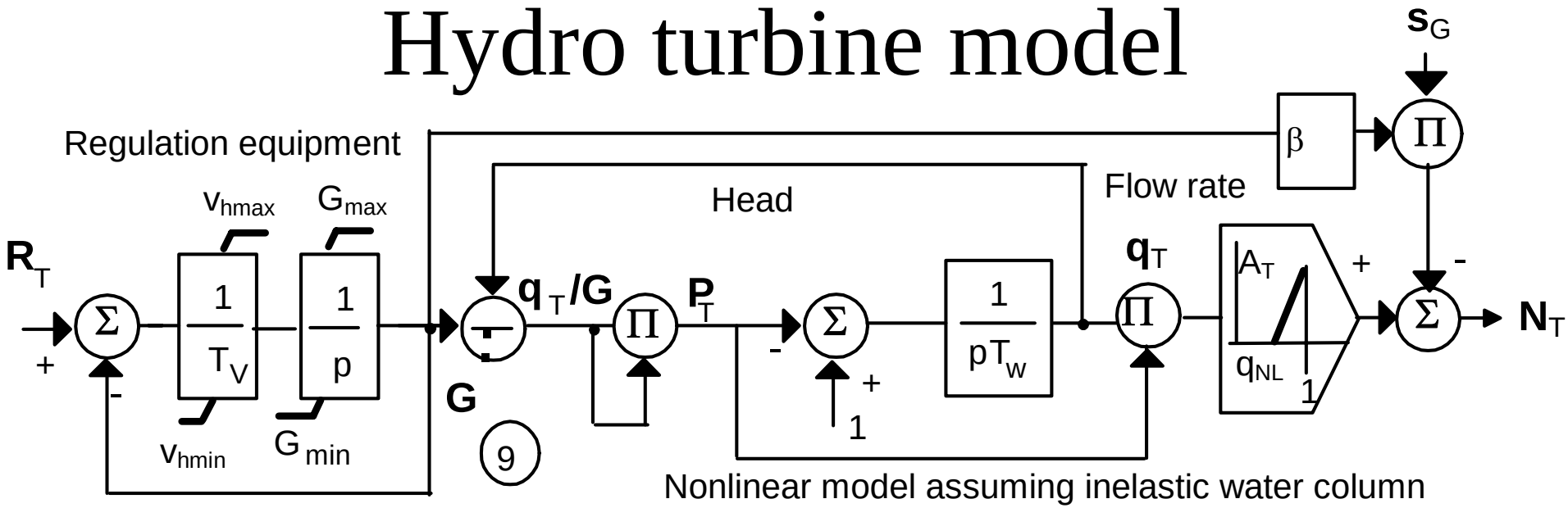


# Gas turbine model

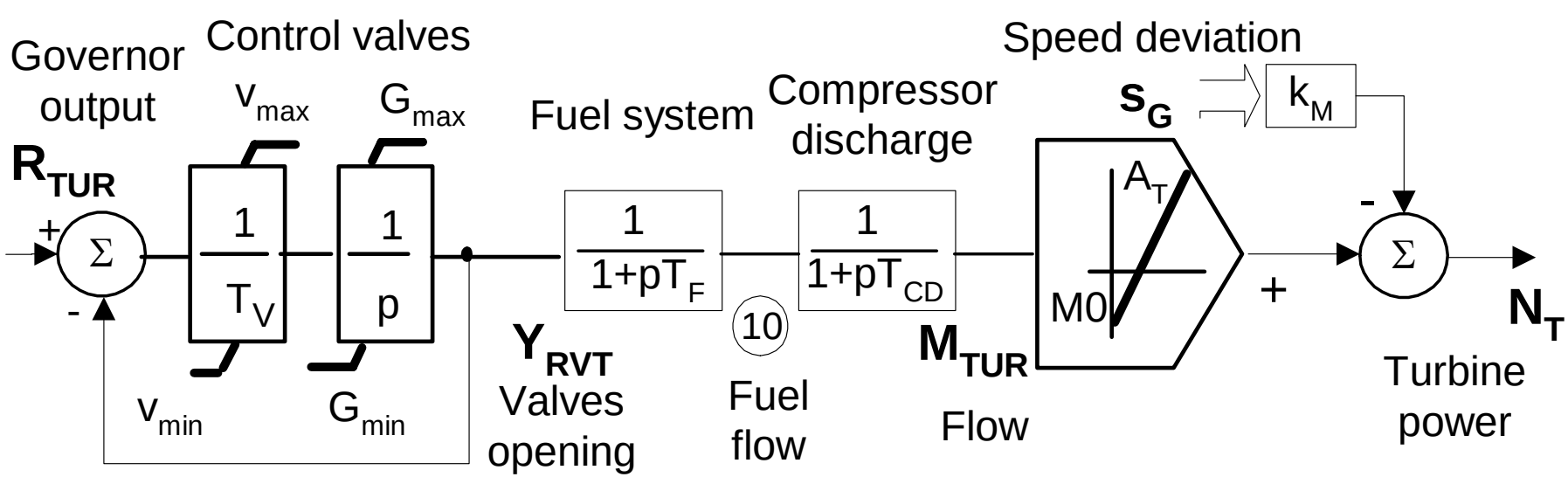

# Turbo diesel model

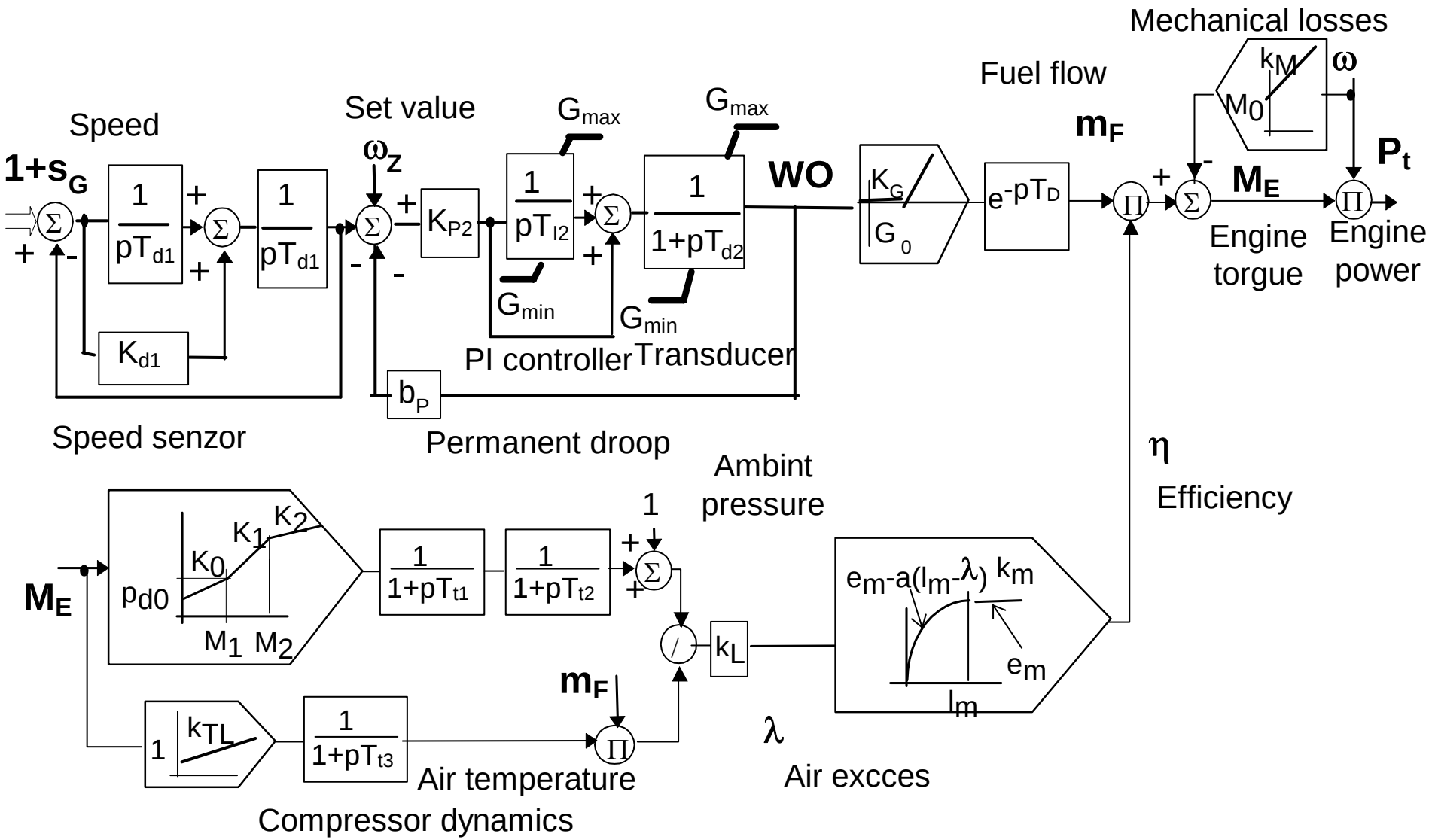

# Steam unit controller in closed loop

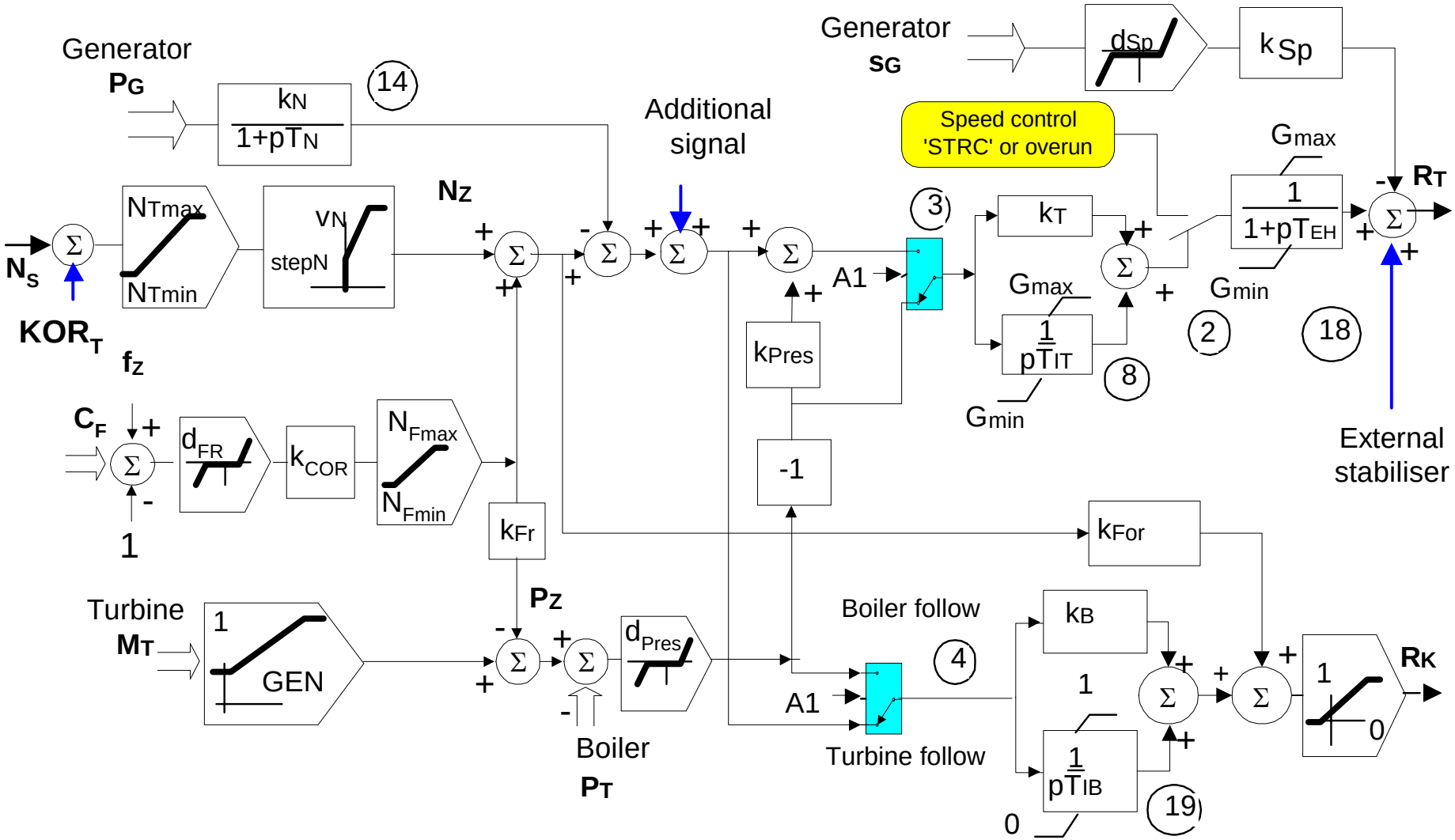

# Control equipment modelling

- Four stage load frequency shedding
- On load tape changers
- Load frequency controllers
- External stabilisers
- Automaton and logics
- External regulators

# Load Frequency Control Model

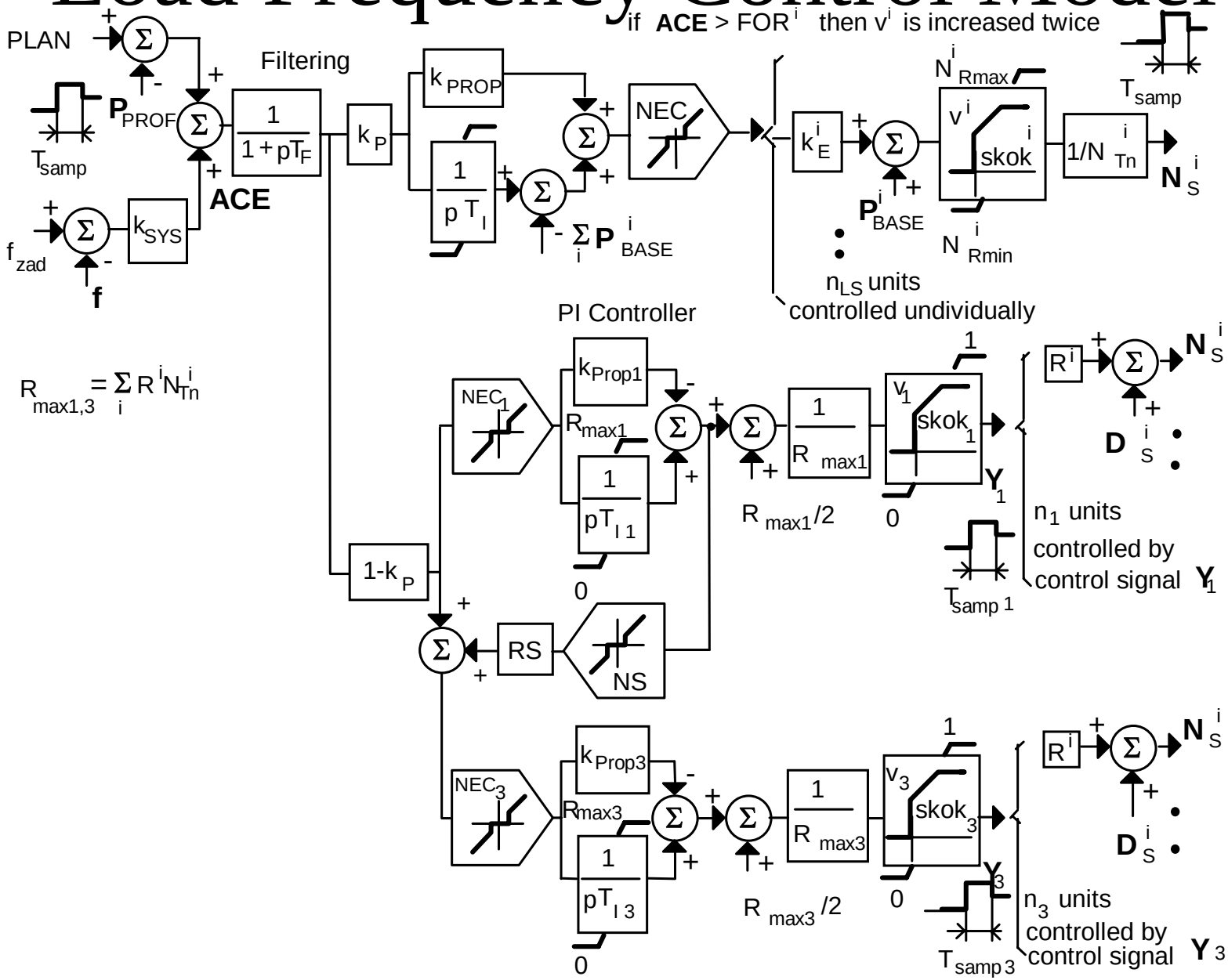

# Automatics Model

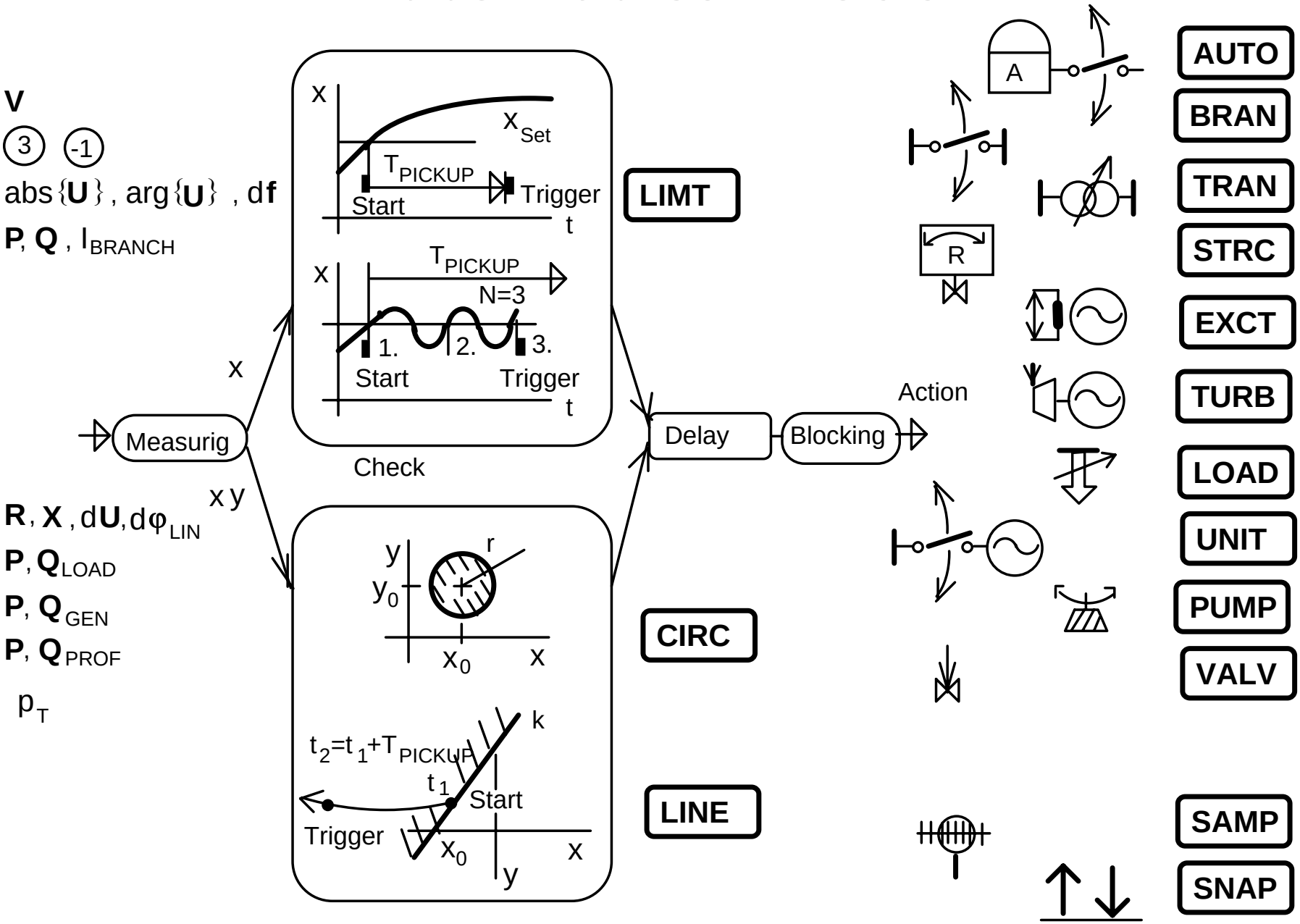
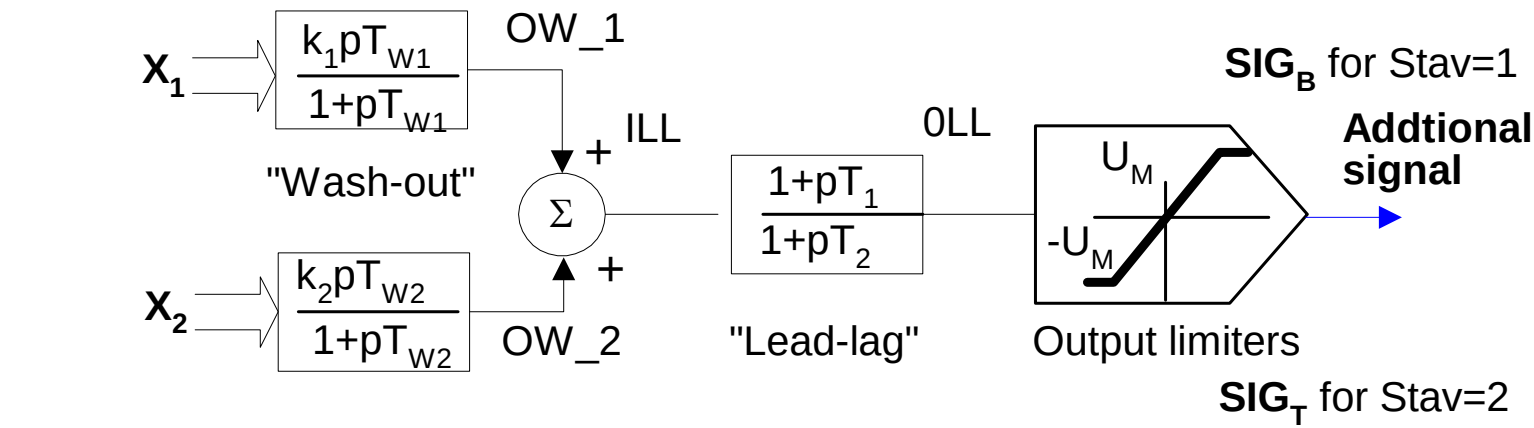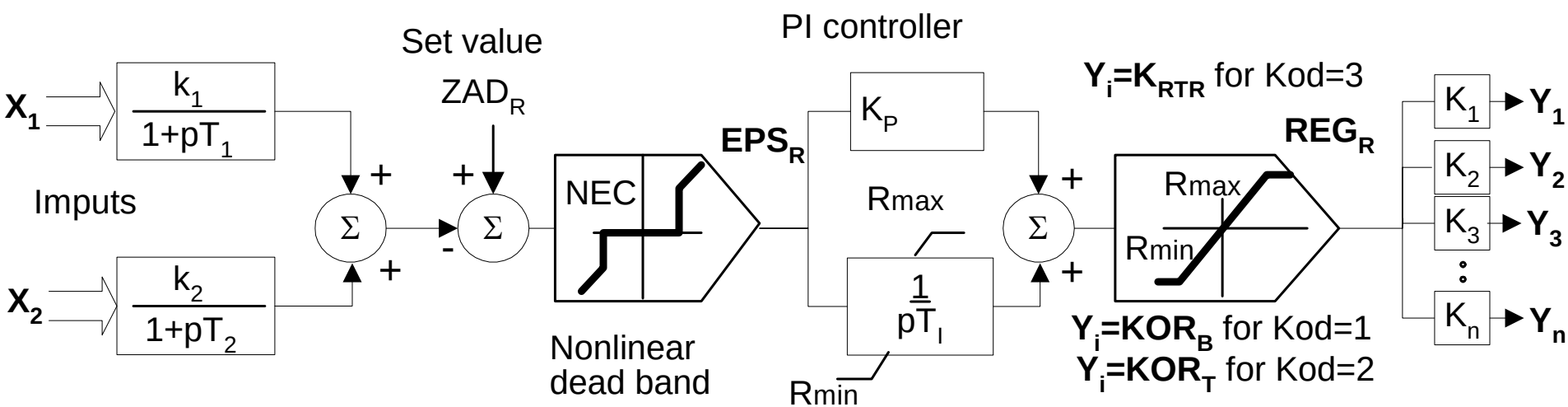
# External stabilizer and controller